GE864 Hardware User Guide

1vv0300694 Rev.9 - 21/06/07

Making machines talk.

This document is relating to the following products:

GE864-QUAD 3990250648
GE864-PY 3990250650

Reproduction forbidden without Telit Communications S.p.A. written authorization - All Rights Reserved

Contents

1 Overview 7

2 GE864 Mechanical Dimensions 8

3 GE864 module connections 9

3.1 PIN-OUT 9

3.1.1 BGA Balls Layout 13

4 Hardware Commands 15

4.1 Turning ON the GE864-QUAD / PY 15

4.2 Turning OFF the GE864-QUAD / PY 17

4.2.1 Hardware shutdown 17

4.2.2 Hardware Unconditional Restart 17

5 Power Supply 19

5.1 Power Supply Requirements 19

5.2 General Design Rules 20

5.2.1 Electrical Design Guidelines 20

5.2.1.1 + 5V input Source Power Supply Design Guidelines 20

5.2.1.2 + 12V input Source Power Supply Design Guidelines 21

5.2.1.3 Battery Source Power Supply Design Guidelines 23

5.2.1.4 Battery Charge control Circuitry Design Guidelines 23

5.2.2 Thermal Design Guidelines 25

5.2.3 Power Supply PCB layout Guidelines 26

6 Antenna 27

6.1 GSM Antenna Requirements 27

6.2 GSM Antenna - PCB line Guidelines 28

6.3 GSM Antenna - Installation Guidelines 29

7 Logic level specifications 30

7.1 Reset signal 31

8 Serial Ports 32

8.1 MODEM SERIAL PORT 32

8.2 RS232 level translation 34

8.3 5V UART level translation 36

9 Audio Section Overview 38

9.1 Microphone Paths Characteristic and Requirements 39

9.2 General Design Rules 42

Reproduction forbidden without Telit Communications S.p.A. written authorization - All Rights Reserved

9.3 Other considerations 42

9.4 Microphone Biasing 43

9.4.1 Balanced Microphone Biasing 43

9.4.2 Unbalanced Microphone Biasing 44

9.5 Microphone Buffering 46

9.5.1 Buffered Balanced Mic 46

9.5.2 Buffered Unbalanced (Single Ended) Microphone 48

10 OUTPUT LINES (Speaker) 51

10.1 Short description 51

10.2 Output Lines Characteristics 52

10.3 General Design Rules 53

10.3.1 Noise Filtering 53

10.4 Handset Earphone Design 54

10.5 Hands-Free Earphone (Low Power) Design 55

10.6 Car Kit Speakerphone Design 56

10.7 The Evaluation Kit for Telit Modules EVK2 57

10.7.1 Short Description 57

10.7.2 EVK2 Audio Lines Characteristics 58

11 General Purpose I/O 59

11.1 GPIO Logic levels 61

11.2 Using a GPIO Pad as INPUT 62

11.3 Using a GPIO Pad as OUTPUT 62

11.4 Using the RF Transmission Control GPIO4 62

11.5 Using the RFTXMON Output GPIO5 62

11.6 Using the Alarm Output GPIO6 63

11.7 Using the Buzzer Output GPIO7 63

11.8 Indication of network service availability 64

11.9 RTC Bypass out 65

11.10 VAUX1 power output 65

12 DAC and ADC section 66

12.1 DAC Converter 66

12.1.1 Description 66

12.1.2 Enabling DAC 67

12.1.3 Low Pass Filter Example 67

12.2 ADC Converter 68

12.2.1 Description 68

12.2.2 Using ADC Converter 68

Reproduction forbidden without Telit Communications S.p.A. written authorization - All Rights Reserved

12.3 Mounting the GE864 on your Board 69
12.3.1 General 69
12.3.2 Module finishing & dimensions 69
12.3.3 Recommended foot print for the application (GE864) 70
12.3.4 Debug of the GE864 in production 71
12.3.5 Stencil 71
12.3.6 PCB pad design 72
12.3.7 Solder paste 73
12.3.8 GE864 Solder reflow 74
12.4 Packing system 75
12.4.1 GE864 orientation on the tray 76
12.4.2 Moisture sensibility 76
13 Conformity Assessment Issues 77
14 SAFETY RECOMMANDATIONS 78
15 Document Change Log 79

Reproduction forbidden without Telit Communications S.p.A. written authorization - All Rights Reserved

DISCLAIMER

The information contained in this document is the proprietary information of Telit Communications S.p.A. and its affiliates ("TELIT"). The contents are confidential and any disclosure to persons other than the officers, employees, agents or subcontractors of the owner or licensee of this document, without the prior written consent of Telit, is strictly prohibited.

Telit makes every effort to ensure the quality of the information it makes available. Notwithstanding the foregoing, Telit does not make any warranty as to the information contained herein, and does not accept any liability for any injury, loss or damage of any kind incurred by use of or reliance upon the information.

Telit disclaims any and all responsibility for the application of the devices characterized in this document, and notes that the application of the device must comply with the safety standards of the applicable country, and where applicable, with the relevant wiring rules.

Telit reserves the right to make modifications, additions and deletions to this document due to typographical errors, inaccurate information, or improvements to programs and/or equipment at any time and without notice. Such changes will, nevertheless be incorporated into new editions of this application note.

All rights reserved.

© 2006 - 2007 Telit Communications S.p.A.

1 Overview

The aim of this document is the description of some hardware solutions useful for developing a product with the **Telit GE864-QUAD / PY module**.
In this document all the basic functions of a mobile phone will be taken into account; for each one of them a proper hardware solution will be suggested and eventually the wrong solutions and common errors to be avoided will be evidenced. Obviously this document cannot embrace the whole hardware solutions and products that may be designed. The wrong solutions to be avoided shall be considered as mandatory, while the suggested hardware configurations shall not be considered mandatory, instead the information given shall be used as a guide and a starting point for properly developing your product with the **Telit GE864-QUAD / PY module**.
For further hardware details that may not be explained in this document refer to the Telit GE864-QUAD / PY Product Description document where all the hardware information is reported.

NOTICE

(EN) The integration of the GSM/GPRS* GE864-QUAD / PY *cellular module within user application shall be done according to the design rules described in this manual.

(IT) L'integrazione del modulo cellulare GSM/GPRS* GE864-QUAD / PY *all'interno dell'applicazione dell'utente dovrà rispettare le indicazioni progettuali descritte in questo manuale.

(DE) Die integration des* GE864-QUAD / PY *GSM/GPRS Mobilfunk-Moduls in ein Gerät muß gemäß der in diesem Dokument beschriebenen Kunstruktionsregeln erfolgen

(SL) Integracija GSM/GPRS* GE864-QUAD / PY *modula v uporabniški aplikaciji bo morala upoštevati projektna navodila, opisana v tem piročniku.

(SP) La utilización del modulo GSM/GPRS* GE864-QUAD / PY *debe ser conforme a los usos para los cuales ha sido deseñado descritos en este manual del usuario.

(FR) L'intégration du module cellulaire GSM/GPRS* GE864-QUAD / PY *dans l'application de l'utilisateur sera faite selon les règles de conception décrites dans ce manuel.

(HE) האינטגרטור מתבקש ליישם את ההנחיות המפורטות במסמך זה בתהליך האינטגרציה של המודם הסלולרי GE864-QUAD / PY עם המוצר.

The information presented in this document is believed to be accurate and reliable. However, no responsibility is assumed by Telit Communications S.p.A. for its use, nor any infringement of patents or other rights of third parties which may result from its use. No license is granted by implication or otherwise under any patent rights of Telit Communications S.p.A. other than for circuitry embodied in Telit products. This document is subject to change without notice.

Reproduction forbidden without Telit Communications S.p.A. written authorization - All Rights Reserved

2 GE864 Mechanical Dimensions

The **Telit GE864 module** overall dimension are:

- **Length:** **30 mm**
- **Width:** **30 mm**
- **Thickness:** **2.8 mm**

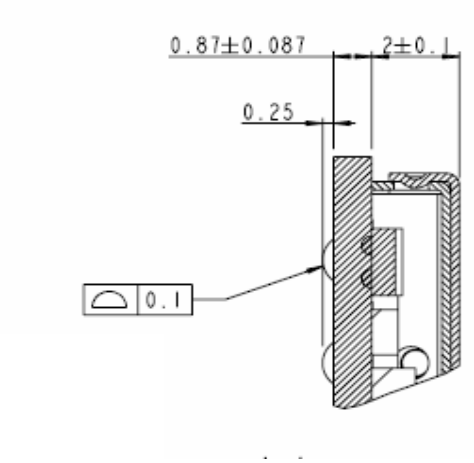

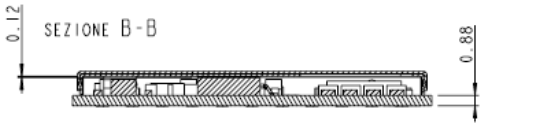

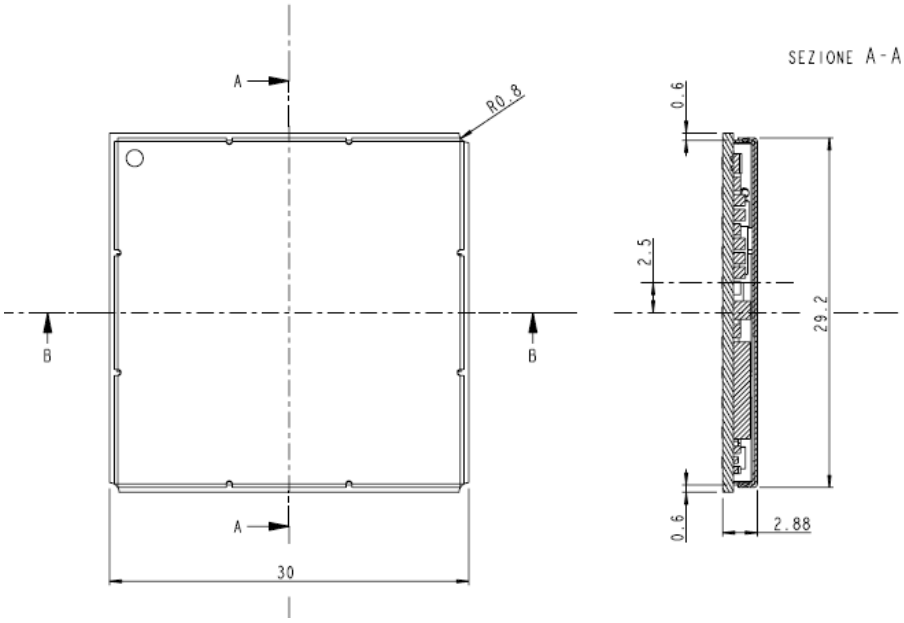

Reproduction forbidden without Telit Communications S.p.A. written authorization - All Rights Reserved

3 GE864 module connections

3.1 PIN-OUT

Ball	Signal	I/O	Function	Internal PULL UP	Type
			Audio		
H9	EAR_MT-	AO	Handset earphone signal output, phase -		Audio
G10	EAR_MT+	AO	Handset earphone signal output, phase +		Audio
H10	EAR_HF+	AO	Handsfree ear output, phase +		Audio
J10	EAR_HF-	AO	Handsfree ear output, phase -		Audio
J8	MIC_MT+	AI	Handset mic.signal input; phase+, nom. level 50mVrms		Audio
G9	MIC_MT-	AI	Handset mic.signal input; phase-, nom. level 50mVrms		Audio
G8	MIC_HF+	AI	Handsfree mic. input; phase +, nom. level 3mVrms		Audio
J9	MIC_HF-	AI	Handsfree mic.input; phase -, nom. level 3mVrms		Audio
F9	AXE	I	Handsfree switching	100K	CMOS 2.8V
			SIM card interface		
C10	SIMCLK	O	External SIM signal – Clock		1,8 / 3V
E9	SIMRST	O	External SIM signal – Reset		1,8 / 3V
D10	SIMIO	I/O	External SIM signal - Data I/O		1,8 / 3V
C11	SIMIN	I	External SIM signal - Presence (active low)	47K	1,8 / 3V
D4[1]	SIMVCC	-	External SIM signal – Power supply for the SIM		1,8 / 3V
			Trace		
D11	TX_TRACE	O	TX Data for debug monitor		CMOS 2.8V
F10	RX_TRACE	I	RX Data for debug monitor		CMOS 2.8V
			Prog. / Data + HW Flow Control		
E7	C103/TXD	I	Serial data input (TXD) from DTE		CMOS 2.8V
H8	C104/RXD	O	Serial data output to DTE		CMOS 2.8V
B7	C108/DTR	I	Input for Data terminal ready signal (DTR) from DTE		CMOS 2.8V
F7	C105/RTS	I	Input for Request to send signal (RTS) from DTE		CMOS 2.8V
F6	C106/CTS	O	Output for Clear to send signal (CTS) to DTE		CMOS 2.8V
D9	C109/DCD	O	Output for Data carrier detect signal (DCD) to DTE		CMOS 2.8V
E11	C107/DSR	O	Output for Data set ready signal (DSR) to DTE		CMOS 2.8V
B6	C125/RING	O	Output for Ring indicator signal (RI) to DTE		CMOS 2.8V

[1] On this line a maximum of 10nF bypass capacitor is allowed

Reproduction forbidden without Telit Communications S.p.A. written authorization - All Rights Reserved

Ball	Signal	I/O	Function	Internal PULL UP	Type
			DAC and ADC		
C7	DAC_OUT	AO	Digital/Analog converter output		D/A
J11	ADC_IN1	AI	Analog/Digital converter input		A/D
H11	ADC_IN2	AI	Analog/Digital converter input		A/D
G11	ADC_IN3	AI	Analog/Digital converter input		A/D
			Miscellaneous Functions		
A2	RESET*	I	Reset input		
E2	VRTC	AO	VRTC Backup capacitor		Power
D8	STAT_LED	O	Status indicator led		**CMOS 1.8V**
G1	CHARGE	AI	Charger input (*)		Power
G2	CHARGE	AI	Charger input (*)		Power
J5	ON_OFF*	I	Input command for switching power ON or OFF (toggle command). The pulse to be sent to the GE864 must be equal or greater than 1 second.	47K	Pull up to VBATT
D5	VAUX1	-	Power output for external accessories		-
L8	PWRMON	O	Power ON Monitor		CMOS 2.8V
L4	Antenna	O	Antenna output - 50 ohm		RF
			GPIO		
G4	TGPIO_12	I/O	Telit GPIO12 Configurable GPIO		CMOS 2.8V
C2	TGPIO_03	I/O	Telit GPIO03 Configurable GPIO		CMOS 2.8V
B3	TGPIO_04	I/O	Telit GPIO04 Configurable GPIO / RF Transmission Control		CMOS 2.8V
C3	TGPIO_20	I/O	Telit GPIO20 Configurable GPIO		CMOS 2.8V
B4	TGPIO_14	I/O	Telit GPIO14 Configurable GPIO		CMOS 2.8V
D1	TGPIO_11	I/O	Telit GPIO11 Configurable GPIO		CMOS 2.8V
B1	TGPIO_19	I/O	Telit GPIO19 Configurable GPIO		CMOS 2.8V
C1	TGPIO_01	I/O	Telit GPIO01 Configurable GPIO		CMOS 2.8V
K7	TGPIO_18	I/O	Telit GPIO18 Configurable GPIO		CMOS 2.8V
H5	TGPIO_17	I/O	Telit GPIO17 Configurable GPIO		CMOS 2.8V
F5	TGPIO_15	I/O	Telit GPIO15 Configurable GPIO		CMOS 2.8V
K11	TGPIO_08	I/O	Telit GPIO08 Configurable GPIO		CMOS 2.8V
B5	TGPIO_06 / ALARM	I/O	Telit GPIO06 Configurable GPIO / ALARM		CMOS 2.8V
C9	TGPIO_09	I/O	Telit GPIO09 GPIO I/O pin		CMOS 2.8V
E6	TGPIO_02 / JDR	I/O	Telit GPIO02 I/O pin / Jammer detect report		CMOS 2.8V
L9	TGPIO_07 / BUZZER	I/O	Telit GPIO07 Configurable GPIO / Buzzer		CMOS 2.8V
H6	TGPIO_16	I/O	Telit GPIO16 Configurable GPIO		CMOS 2.8V
K10	TGPIO_13	I/O	Telit GPIO13 Configurable GPIO		CMOS 2.8V
K8	TGPIO_05 / RFTXMON	I/O	Telit GPIO05 Configurable GPIO / Transmitter ON monitor		CMOS 2.8V
L10	TGPIO_21	I/O	Telit GPIO21 Configurable GPIO		CMOS 2.8V
E8	TGPIO_22	I/O	Telit GPIO22 Configurable GPIO		**CMOS 1.8V (not 2.8V !!)**
H3	TGPIO_10	I/O	Telit GPIO10 Configurable GPIO		CMOS 2.8V
			Power Supply		
J1	VBATT	-	Main power supply		Power

Reproduction forbidden without Telit Communications S.p.A. written authorization - All Rights Reserved

Ball	Signal	I/O	Function	Internal PULL UP	Type
K1	VBATT	-	Main power supply		Power
J2	VBATT	-	Main power supply		Power
K2	VBATT	-	Main power supply		Power
A1	GND	-	Ground		Power
F1	GND	-	Ground		Power
H1	GND	-	Ground		Power
L1	GND	-	Ground		Power
H2	GND	-	Ground		Power
L2	GND	-	Ground		Power
J3	GND	-	Ground		Power
K3	GND	-	Ground		Power
L3	GND	-	Ground		Power
K4	GND	-	Ground		Power
K5	GND	-	Ground		Power
D6	GND	-	Ground		Power
K6	GND	-	Ground		Power
L6	GND	-	Ground		Power
A11	GND	-	Ground		Power
F11	GND	-	Ground		Power
L11	GND	-	Ground		Power
RESERVED					
A10		-			
A3		-			
A4		-			
A5		-			
A6		-			
A7		-			
A8		-			
A9		-			
B10		-			
B11		-			
B2		-			
B8		-			
B9		-			
C4		-			
C8		-			
D2		-			
D3		-			
E1		-			
E10		-			
E3		-			
E4		-			
F2		-			

Reproduction forbidden without Telit Communications S.p.A. written authorization - All Rights Reserved

Ball	Signal	I/O	Function	Internal PULL UP	Type
F3		-			
F4		-			
G6		-			
G7		-			
H4		-			
H7		-			
J4		-			
J6		-			
J7		-			
K9		-			
L5		-			
E5		-			
L7		-			
G5		-			
G3		-			
D7		-			
C6		-			
F8		-			
C5		-			

NOTE: RESERVED pins must not be connected

NOTE: If not used, almost all pins should be left disconnected. The only exceptions are the following pins:

pin	signal
J1,K1,J2,K2	VBATT
A1,F1,H1,L1,H2,L2,J3,K3,L3, K4,K5,D6,K6,L6,A11,F11,L11	GND
J5	ON/OFF*
E7	TXD
A2	RESET*
H8	RXD
F7	RTS[1]

[1] RTS should be connected to the GND (on the module side) if flow control is not used

Reproduction forbidden without Telit Communications S.p.A. written authorization - All Rights Reserved

3.1.1 BGA Balls Layout

TOP VIEW

	A	B	C	D	E	F	G	H	J	K	L
1	GND	TGPIO_19	TGPIO_01	TGPIO_11	-	GND	CHARGE	GND	VBATT	VBATT	GND
2	RESET*	-	TGPIO_03	-	VRTC	-	CHARGE	GND	VBATT	VBATT	GND
3	-	TGPIO_04	TGPIO_20	-	-	-	VMICN	TGPIO_10	GND	GND	GND
4	-	TGPIO_14	-	SIMVCC	-	-	TGPIO_12	-	-	GND	Antenna
5	-	TGPIO_06 / ALARM		VAUX1	-	TGPIO_15	VMICP	TGPIO_17	ON_OFF*	GND	-
6	-	C125/RING		GND	TGPIO_02 / JDR	C106 / CTS	-	TGPIO_16	-	GND	GND
7	-	C108 / DTR	DAC_OUT	-	C103 / TXD	C105 / RTS	-	-	-	TGPIO_18	-
8	-	-	-	STAD_ LED	TGPIO_22	-	MIC_HF+	C104 / RXD	MIC_MT+	TGPIO_05 / RFTXMON	PWRMON
9	-	-	TGPIO_09	C109 / DCD	SIMRST	AXE	MIC_MT-	EAR_MT-	MIC_HF-	-	TGPIO_07 / BUZZER
10	-	-	SIMCLK	SIMIO	-	RX_TRACE	EAR_MT+	EAR_HF+	EAR_HF-	TGPIO_13	TGPIO_21
11	GND	-	SIMIN	TX_TRACE	C107 / DSR	GND	ADC_IN3	ADC_IN2	ADC_IN1	TGPIO_08	GND

Reproduction forbidden without Telit Communications S.p.A. written authorization - All Rights Reserved

	AUDIO Signals balls
	SIM CARD interface balls
	TRACE Signals balls
	Prog. / data + Hw Flow Control signals balls
	DAC and ADC signals balls
	MISCELLANEOUS functions signals balls
	TELIT GPIO balls
	POWER SUPPLY VBATT balls
	POWER SUPPLY GND balls
	RESERVED

Reproduction forbidden without Telit Communications S.p.A. written authorization - All Rights Reserved

4 Hardware Commands

4.1 Turning ON the GE864-QUAD / PY

To turn on the GE864-QUAD / PY the pad ON# must be tied low for at least 1 seconds and then released.
The maximum current that can be drained from the ON# pad is 0,1 mA.
A simple circuit to do it is:

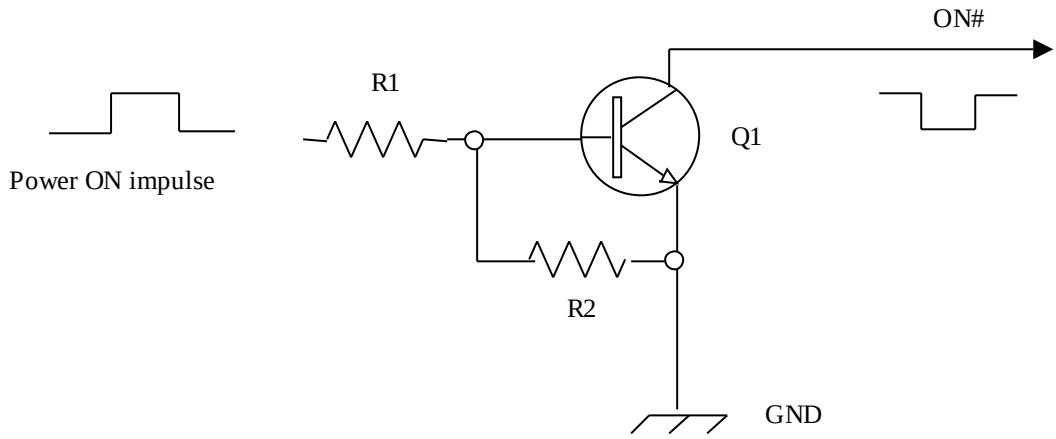

NOTE: don't use any pull up resistor on the ON# line, it is internally pulled up. Using pull up resistor may bring to latch up problems on the GE864-QUAD / PY power regulator and improper power on/off of the module. The line ON# must be connected only in open collector configuration.

NOTE: In this document all the lines that are inverted, hence have active low signals are labeled with a name that ends with a "#" or with a bar over the name.

NOTE: The GE864-QUAD / PY turns fully on also by supplying power to the Charge pad (Module provided with a battery on the VBATT pads).

TIP: To check if the device has powered on, the hardware line PWRMON should be monitored. After 900ms the line raised up the device could be considered powered on.
PWRMON line rises up also when supplying power to the Charge pad

Reproduction forbidden without Telit Communications S.p.A. written authorization - All Rights Reserved

For example:
1- Let's assume you need to drive the ON# pad with a totem pole output of a +3/5 V microcontroller (uP_OUT1):

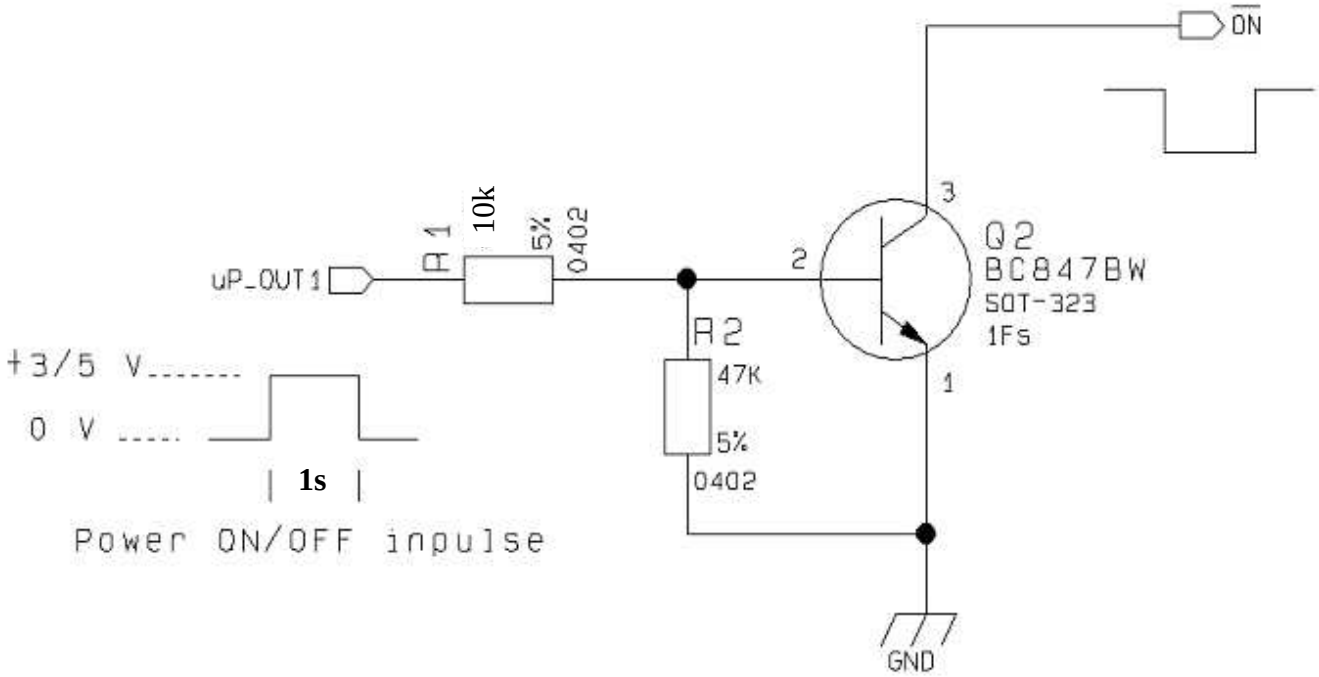

2- Let's assume you need to drive the ON# pad directly with an ON/OFF button:

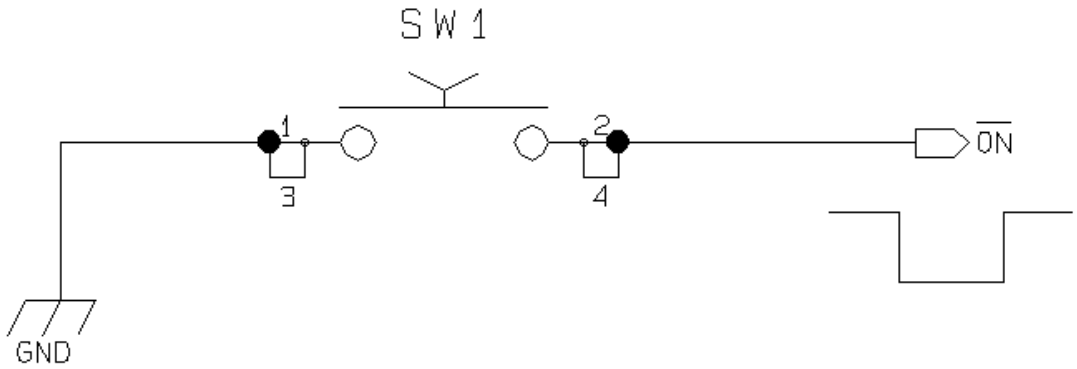

Reproduction forbidden without Telit Communications S.p.A. written authorization - All Rights Reserved

4.2 Turning OFF the GE864-QUAD / PY

The turning off of the device can be done in three ways:

- by software command (see GE864-QUAD / PY Software User Guide)
- by hardware shutdown
- by Hardware Unconditional Restart

When the device is shut down by software command or by hardware shutdown, it issues to the network a detach request that informs the network that the device will not be reachable any more.

4.2.1 Hardware shutdown

To turn OFF the GE864-QUAD / PY the pad ON# must be tied low for at least 2 seconds and then released.
The same circuitry and timing for the power on shall be used.
The device shuts down after the release of the ON# pad.

TIP: To check if the device has powered off, the hardware line PWRMON should be monitored. When PWRMON goes low, the device has powered off.

4.2.2 Hardware Unconditional Restart

To unconditionally Restart the GE864-QUAD / PY, the pad RESET# must be tied low for at least 200 milliseconds and then released.
The maximum current that can be drained from the ON# pad is 0,15 mA.
A simple circuit to do it is:

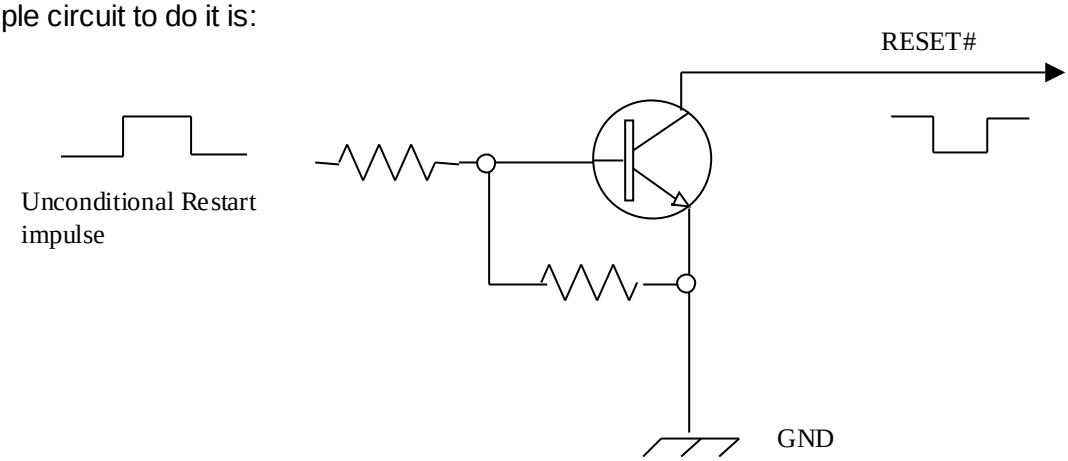

Reproduction forbidden without Telit Communications S.p.A. written authorization - All Rights Reserved

NOTE: don't use any pull up resistor on the RESET# line nor any totem pole digital output. Using pull up resistor may bring to latch up problems on the GE864-QUAD / PY power regulator and improper functioning of the module. The line RESET# must be connected only in open collector configuration.

TIP: The unconditional hardware Restart should be always implemented on the boards and software should use it as an emergency exit procedure.

For example:
1- Let's assume you need to drive the RESET# pad with a totem pole output of a +3/5 V microcontroller (uP_OUT2):

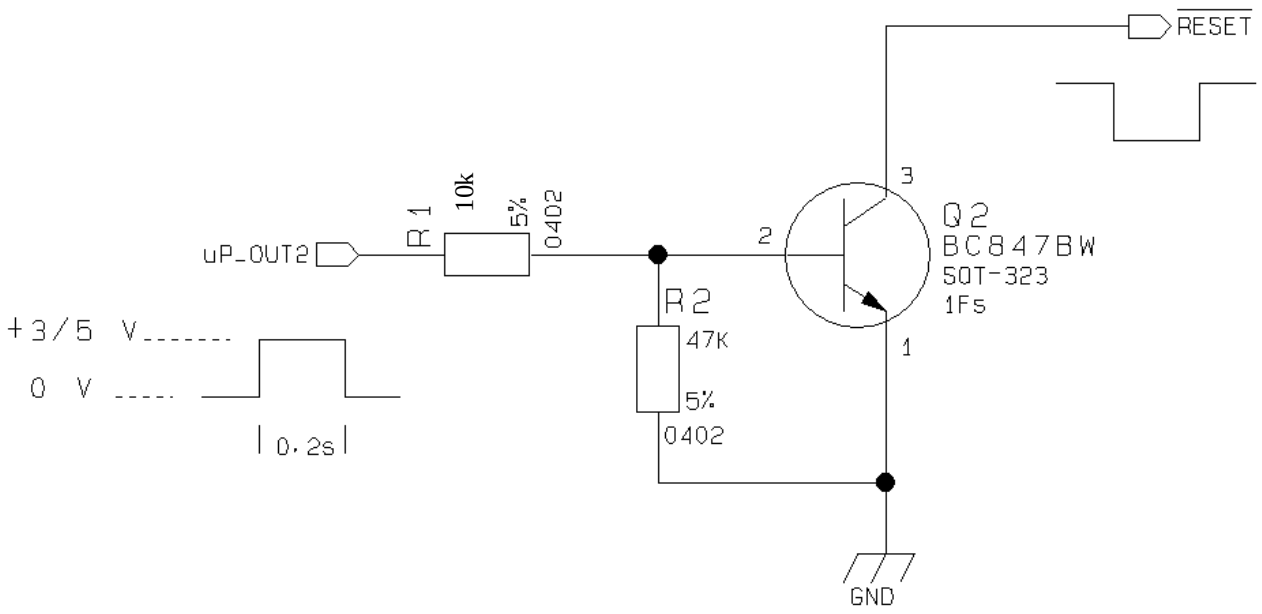

Reset Signal Operating levels:

Signal	Min	Max
RESET Input high	2.2V*	3.3V
RESET Input low	0V	0.2V

* this signal is internally pulled up so the pin can be left floating if not used.

Reproduction forbidden without Telit Communications S.p.A. written authorization - All Rights Reserved

5 Power Supply

The power supply circuitry and board layout are a very important part in the full product design and they strongly reflect on the product overall performances, hence read carefully the requirements and the guidelines that will follow for a proper design.

5.1 Power Supply Requirements

The GE864-QUAD / PY power consumptions are:

GE864-QUAD/PY		
Mode	**Average (mA)**	**Mode description**
IDLE mode		Stand by mode; no call in progress
AT+CFUN=1	23,9	Normal mode: full functionality of the module
AT+CFUN=4	22	Disabled TX and RX; module is not registered on the network
AT+CFUN=0 or AT+CFUN=5	7,20 / 3,56[1]	Power saving: CFUN=0 module registered on the network and can receive voice call or an SMS; but it is not possible to send AT commands; module wakes up with an unsolicited code (call or SMS) or rising RTS line. CFUN=5 full functionality with power saving; module registered on the network can receive incoming calls and SMS
RX mode		GSM Receiving data mode
1 slot in downlink	52,3	
2 slot in downlink	65,2	
3 slot in downlink	78,6	
4 slot in downlink	88,4	
GSM TX and RX mode		GSM Sending data mode
Min power level	78,1	
Max power level	200,1	
GPRS (class 10) TX and RX mode		GPRS Sending data mode
Min power level	123,7	
Max power level	370,8	

The GSM system is made in a way that the RF transmission is not continuous, else it is packed into bursts at a base frequency of about 216 Hz, the relative current peaks can be as high as about 2A. Therefore the power supply has to be designed in order to withstand with these current peaks without big voltage drops; this means that both the electrical design and the board layout must be designed for this current flow.

[1] Worst/best case depends on network configuration and is not under module control

Reproduction forbidden without Telit Communications S.p.A. written authorization - All Rights Reserved

If the layout of the PCB is not well designed a strong noise floor is generated on the ground and the supply; this will reflect on all the audio paths producing an audible annoying noise at 216 Hz; if the voltage drop during the peak current absorption is too much, then the device may even shutdown as a consequence of the supply voltage drop.

TIP: The electrical design for the Power supply should be made ensuring it will be capable of a peak current output of at least 2 A.

5.2 General Design Rules

The principal guidelines for the Power Supply Design embrace three different design steps:

- the electrical design
- the thermal design
- the PCB layout.

5.2.1 Electrical Design Guidelines

The electrical design of the power supply depends strongly from the power source where this power is drained. We will distinguish them into three categories:

- +5V input (typically PC internal regulator output)
- +12V input (typically automotive)
- Battery

5.2.1.1 + 5V input Source Power Supply Design Guidelines

- The desired output for the power supply is 3.8V, hence there's not a big difference between the input source and the desired output and a linear regulator can be used. A switching power supply will not be suited because of the low drop out requirements.
- When using a linear regulator, a proper heat sink shall be provided in order to dissipate the power generated.
- A Bypass low ESR capacitor of adequate capacity must be provided in order to cut the current absorption peaks close to the GE864-QUAD / PY, a 100µF tantalum capacitor is usually suited.
- Make sure the low ESR capacitor on the power supply output (usually a tantalum one) is rated at least 10V.
- A protection diode should be inserted close to the power input, in order to save the GE864-QUAD / PY from power polarity inversion.

Reproduction forbidden without Telit Communications S.p.A. written authorization - All Rights Reserved

An example of linear regulator with 5V input is:

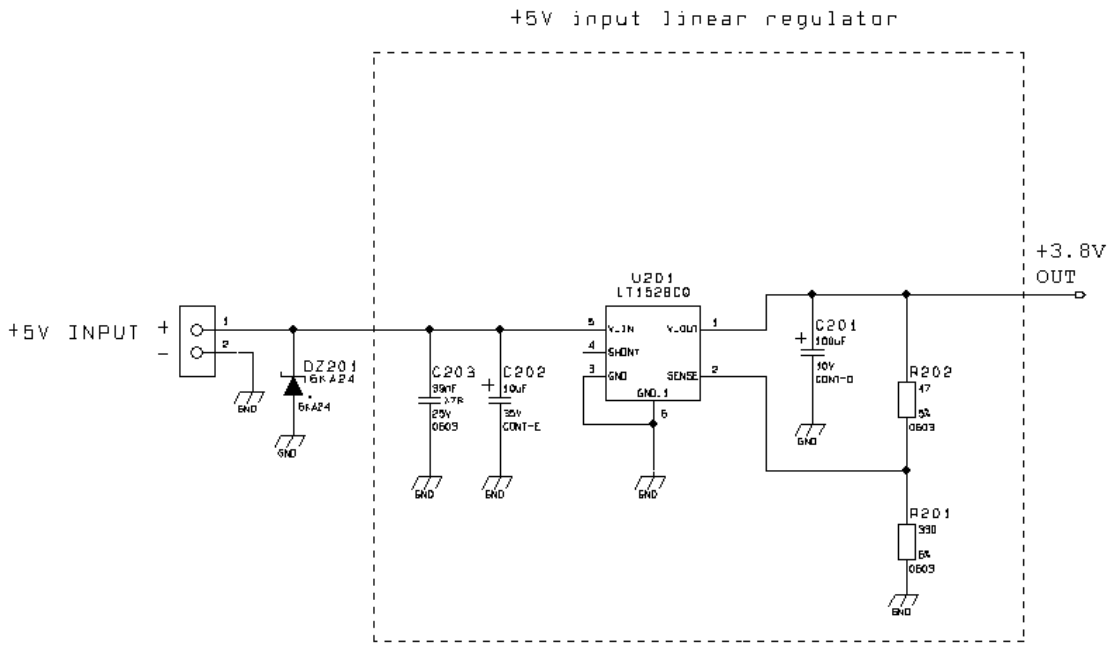

5.2.1.2 + 12V input Source Power Supply Design Guidelines

- The desired output for the power supply is 3.8V, hence due to the big difference between the input source and the desired output, a linear regulator is not suited and shall not be used. A switching power supply will be preferable because of its better efficiency especially with the 2A peak current load represented by the GE864-QUAD/PY.
- When using a switching regulator, a 500kHz or more switching frequency regulator is preferable because of its smaller inductor size and its faster transient response. This allows the regulator to respond quickly to the current peaks absorption.
- In any case the frequency and Switching design selection is related to the application to be developed due to the fact the switching frequency could also generate EMC interferences.
- For car PB battery the input voltage can rise up to 15,8V and this should be kept in mind when choosing components: all components in the power supply must withstand this voltage.
- A Bypass low ESR capacitor of adequate capacity must be provided in order to cut the current absorption peaks, a 100µF tantalum capacitor is usually suited.
- Make sure the low ESR capacitor on the power supply output (usually a tantalum one) is rated at least 10V.
- For Car applications a spike protection diode should be inserted close to the power input, in order to clean the supply from spikes.
- A protection diode should be inserted close to the power input, in order to save the GE864-QUAD/PY from power polarity inversion. This can be the same diode as for spike protection.

Reproduction forbidden without Telit Communications S.p.A. written authorization - All Rights Reserved

An example of switching regulator with 12V input is in the below schematic (it is split in 2 parts):

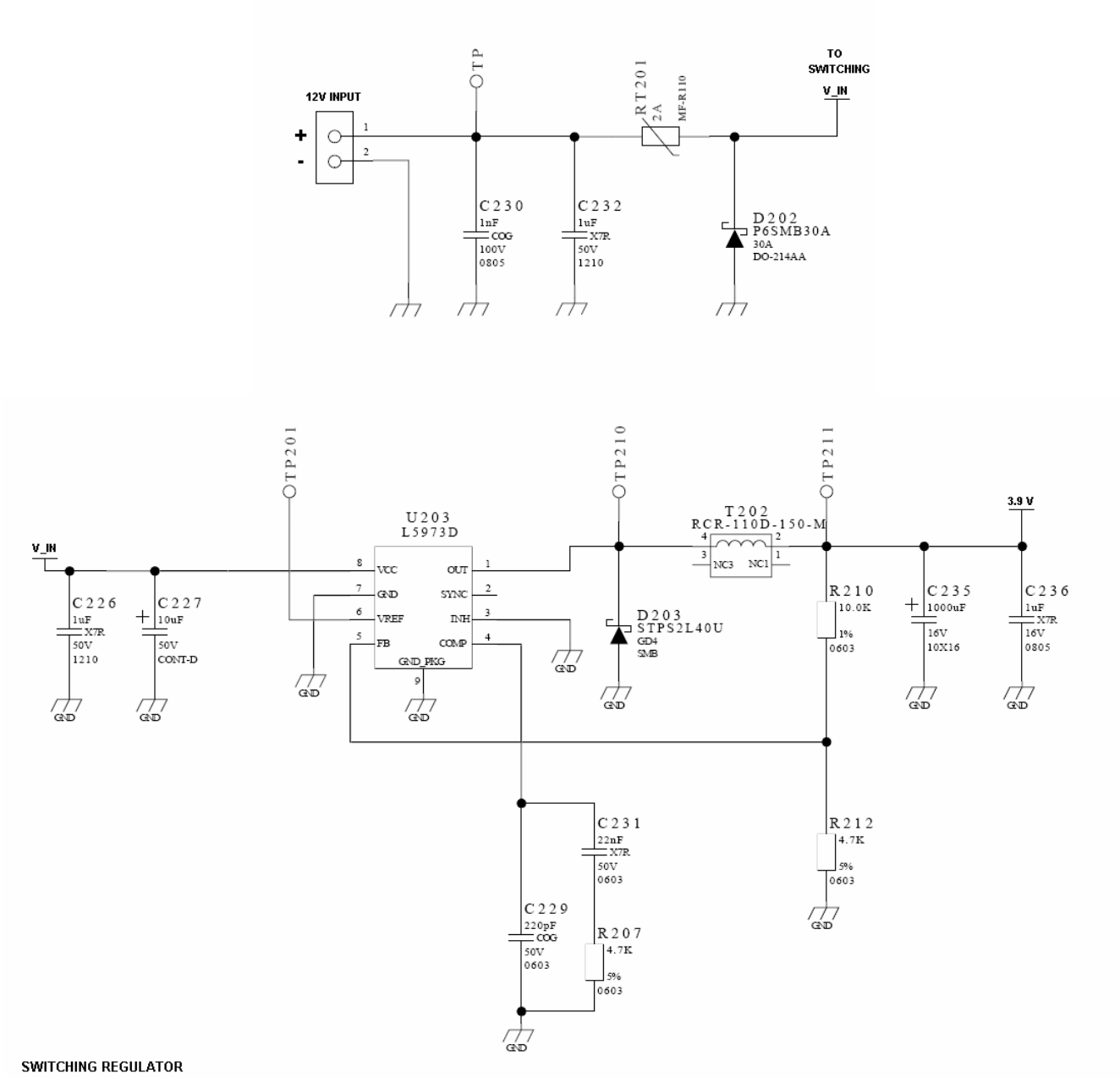

SWITCHING REGULATOR

5.2.1.3 Battery Source Power Supply Design Guidelines

- The desired nominal output for the power supply is 3.8V and the maximum voltage allowed is 4.2V, hence a single 3.7V Li-Ion cell battery type is suited for supplying the power to the Telit GE864-QUAD/PY module.

  The three cells Ni/Cd or Ni/MH 3,6 V Nom. battery types or 4V PB types ***MUST NOT BE USED DIRECTLY*** since their maximum voltage can rise over the absolute maximum voltage for the GE864-QUAD/PY and damage it.

NOTE: DON'T USE any Ni-Cd, Ni-MH, and Pb battery types directly connected with GE864-QUAD/PY. Their use can lead to overvoltage on the GE864-QUAD/PY and damage it. USE ONLY Li-Ion battery types.

- A Bypass low ESR capacitor of adequate capacity must be provided in order to cut the current absorption peaks, a 100µF tantalum capacitor is usually suited.
- Make sure the low ESR capacitor (usually a tantalum one) is rated at least 10V.
- A protection diode should be inserted close to the power input, in order to save the GE864-QUAD/PY from power polarity inversion. Otherwise the battery connector should be done in a way to avoid polarity inversions when connecting the battery.
- The battery capacity must be at least 500mAh in order to withstand the current peaks of 2A; the suggested capacity is from 500mAh to 1000mAh.

5.2.1.4 Battery Charge control Circuitry Design Guidelines

The charging process for Li-Ion Batteries can be divided into 4 phases:

- Qualification and trickle charging
- Fast charge 1 - constant current
- Final charge - constant voltage or pulsed charging
- Maintenance charge

The qualification process consists in a battery voltage measure, indicating roughly its charge status. If the battery is deeply discharged, that means its voltage is lower than the trickle charging threshold, then the charge must start slowly possibly with a current limited pre-charging process where the current is kept very low with respect to the fast charge value: the trickle charging.
During the trickle charging the voltage across the battery terminals rises; when it reaches the fast charge threshold level the charging process goes into fast charge phase.
During the fast charge phase the process proceeds with a current limited charging; this current limit depends on the required time for the complete charge and from the battery pack capacity. During this phase the voltage across the battery terminals still raises but at a lower rate.
Once the battery voltage reaches its maximum voltage then the process goes into its third state: Final charging. The voltage measure to change the process status into final charge is very important. It must be ensured that the maximum battery voltage is never exceeded, otherwise the battery may be damaged and even explode. Moreover for the constant voltage final chargers, the constant voltage

Reproduction forbidden without Telit Communications S.p.A. written authorization - All Rights Reserved

phase (final charge) must not start before the battery voltage has reached its maximum value, otherwise the battery capacity will be highly reduced.
The final charge can be of two different types: constant voltage or pulsed. GE864-QUAD/PY uses constant voltage.
The constant voltage charge proceeds with a fixed voltage regulator (very accurately set to the maximum battery voltage) and hence the current will decrease while the battery is becoming charged. When the charging current falls below a certain fraction of the fast charge current value, then the battery is considered fully charged, the final charge stops and eventually starts the maintenance.
The pulsed charge process has no voltage regulation, instead the charge continues with pulses. Usually the pulse charge works in the following manner: the charge is stopped for some time, let's say few hundreds of ms, then the battery voltage will be measured and when it drops below its maximum value a fixed time length charging pulse is issued. As the battery approaches its full charge the off time will become longer, hence the duty-cycle of the pulses will decrease. The battery is considered fully charged when the pulse duty-cycle is less than a threshold value, typically 10%, the pulse charge stops and eventually the maintenance starts.
The last phase is not properly a charging phase, since the battery at this point is fully charged and the process may stop after the final charge. The maintenance charge provides an additional charging process to compensate for the charge leak typical of a Li-Ion battery. It is done by issuing pulses with a fixed time length, again few hundreds of ms, and a duty-cycle around 5% or less.
This last phase is not implemented in the GE864-QUAD/PY internal charging algorithm, so that the battery once charged is left discharging down to a certain threshold so that it is cycled from full charge to slight discharge even if the battery charger is always inserted. This guarantees that anyway the remaining charge in the battery is a good percentage and that the battery is not damaged by keeping it always fully charged (Li-Ion rechargeable battery usually deteriorate when kept fully charged).
Last but not least, in some applications it is highly desired that the charging process restarts when the battery is discharged and its voltage drops below a certain threshold, GE864-QUAD/PY internal charger does it.

As you can see, the charging process is not a trivial task to be done; moreover all these operations should start only if battery temperature is inside a charging range, usually 5℃ - 45℃.
The GE864-QUAD/PY measures the temperature of its internal component, in order to satisfy this last requirement, it's not exactly the same as the battery temperature but in common application the two temperature should not differ too much and the charging temperature range should be guaranteed.

NOTE: For all the threshold voltages, inside the GE864-QUAD/PY all threshold are fixed in order to maximize Li-Ion battery performances and do not need to be changed.

NOTE: In this application the battery charger input current must be limited to less than 400mA. This can be done by using a current limited wall adapter as the power source.

NOTE: When starting the charger from Module powered off the startup will be in CFUN4; to activate the normal mode a command AT+CFUN=1 has to be provided. This is also possible using the POWER ON.
There is also the possibility to activate the normal mode using the ON_OFF* signal.
In this case, when HW powering off the module with the same line (ON_OFF*) and having the charger still connected, the module will go back to CFUN4.

Reproduction forbidden without Telit Communications S.p.A. written authorization - All Rights Reserved

5.2.2 Thermal Design Guidelines

The thermal design for the power supply heat sink should be done with the following specifications:

- *Average current consumption during transmission @PWR level max:* *500mA*
- *Average current consumption during transmission @ PWR level min:* *100mA*
- *Average current during Power Saving (CFUN=5):* *4mA*
- *Average current during idle (Power Saving disabled)* *24mA*

NOTE: The average consumption during transmissions depends on the power level at which the device is requested to transmit by the network. The average current consumption hence varies significantly.

Considering the very low current during idle, especially if Power Saving function is enabled, it is possible to consider from the thermal point of view that the device absorbs current significantly only during calls.
If we assume that the device stays into transmission for short periods of time (let's say few minutes) and then remains for a quite long time in idle (let's say one hour), then the power supply has always the time to cool down between the calls and the heat sink could be smaller than the calculated one for 500mA maximum RMS current, or even could be the simple chip package (no heat sink).
Moreover in the average network conditions the device is requested to transmit at a lower power level than the maximum and hence the current consumption will be less than the 500mA, being usually around 150mA.
For these reasons the thermal design is rarely a concern and the simple ground plane where the power supply chip is placed can be enough to ensure a good thermal condition and avoid overheating.
For the heat generated by the GE864-QUAD / PY, you can consider it to be during transmission 1W max during CSD/VOICE calls and 2W max during class10 GPRS upload.
This generated heat will be mostly conducted to the ground plane under the GE864-QUAD / PY; you must ensure that your application can dissipate it.

Reproduction forbidden without Telit Communications S.p.A. written authorization - All Rights Reserved

5.2.3 Power Supply PCB layout Guidelines

As seen on the electrical design guidelines the power supply shall have a low ESR capacitor on the output to cut the current peaks and a protection diode on the input to protect the supply from spikes and polarity inversion. The placement of these components is crucial for the correct working of the circuitry. A misplaced component can be useless or can even decrease the power supply performances.

- The Bypass low ESR capacitor must be placed close to the Telit GE864-QUAD / PY power input pads or in the case the power supply is a switching type it can be placed close to the inductor to cut the ripple provided the PCB trace from the capacitor to the GE864-QUAD / PY is wide enough to ensure a dropless connection even during the 2A current peaks.
- The protection diode must be placed close to the input connector where the power source is drained.
- The PCB traces from the input connector to the power regulator IC must be wide enough to ensure no voltage drops occur when the 2A current peaks are absorbed. Note that this is not made in order to save power loss but especially to avoid the voltage drops on the power line at the current peaks frequency of 216 Hz that will reflect on all the components connected to that supply, introducing the noise floor at the burst base frequency. For this reason while a voltage drop of 300-400 mV may be acceptable from the power loss point of view, the same voltage drop may not be acceptable from the noise point of view. If your application doesn't have audio interface but only uses the data feature of the Telit GE864-QUAD / PY, then this noise is not so disturbing and power supply layout design can be more forgiving.
- The PCB traces to the GE864-QUAD / PY and the Bypass capacitor must be wide enough to ensure no significant voltage drops occur when the 2A current peaks are absorbed. This is for the same reason as previous point. Try to keep this trace as short as possible.
- The PCB traces connecting the Switching output to the inductor and the switching diode must be kept as short as possible by placing the inductor and the diode very close to the power switching IC (only for switching power supply). This is done in order to reduce the radiated field (noise) at the switching frequency (100-500 kHz usually).
- The use of a good common ground plane is suggested.
- The placement of the power supply on the board should be done in such a way to guarantee that the high current return paths in the ground plane are not overlapped to any noise sensitive circuitry as the microphone amplifier/buffer or earphone amplifier.
- The power supply input cables should be kept separate from noise sensitive lines such as microphone/earphone cables.

Reproduction forbidden without Telit Communications S.p.A. written authorization - All Rights Reserved

6 Antenna

The antenna connection and board layout design are the most important part in the full product design and they strongly reflect on the product overall performances, hence read carefully and follow the requirements and the guidelines for a proper design.

6.1 GSM Antenna Requirements

As suggested on the Product Description the antenna and antenna line on PCB for a Telit GE864-QUAD / PY device shall fulfill the following requirements:

ANTENNA REQUIREMENTS	
Frequency range	Depending by frequency band(s) provided by the network operator, the customer shall use the most suitable antenna for that/those band(s)
Bandwidth	70 MHz in GSM850, 80 MHz in GSM900, 170 MHz in DCS & 140 MHz PCS band
Gain	Gain < 3dBi
Impedance	50 ohm
Input power	> 2 W peak power
VSWR absolute max	<= 10:1
VSWR recommended	<= 2:1

When using the Telit GE864-QUAD / PY, since there's no antenna connector on the module, the antenna must be connected to the GE864-QUAD / PY through the PCB with the antenna pad.

In the case that the antenna is not directly developed on the same PCB, hence directly connected at the antenna pad of the GE864-QUAD / PY, then a PCB line is needed in order to connect with it or with its connector.

Reproduction forbidden without Telit Communications S.p.A. written authorization - All Rights Reserved

This line of transmission shall fulfill the following requirements:

ANTENNA LINE ON PCB REQUIREMENTS	
Impedance	50 ohm
Max Attenuation	0,3 dB
No coupling with other signals allowed	
Cold End (Ground Plane) of antenna shall be equipotential to the GE864-QUAD / PY ground pins	

Furthermore if the device is developed for the US market and/or Canada market, it shall comply to the FCC and/or IC approval requirements:
This device is to be used only for mobile and fixed application. The antenna(s) used for this transmitter must be installed to provide a separation distance of at least 20 cm from all persons and must not be co-located or operating in conjunction with any other antenna or transmitter. End-Users must be provided with transmitter operation conditions for satisfying RF exposure compliance. OEM integrators must ensure that the end user has no manual instructions to remove or install the GE864-QUAD / PY module. Antennas used for this OEM module must not exceed 3dBi gain for mobile and fixed operating configurations.

6.2 GSM Antenna - PCB line Guidelines

- Ensure that the antenna line impedance is 50 ohm;
- Keep the antenna line on the PCB as short as possible, since the antenna line loss shall be less than 0,3 dB;
- Antenna line must have uniform characteristics, constant cross section, avoid meanders and abrupt curves;
- Keep, if possible, one layer of the PCB used only for the Ground plane;
- Surround (on the sides, over and under) the antenna line on PCB with Ground, avoid having other signal tracks facing directly the antenna line track;
- The ground around the antenna line on PCB has to be strictly connected to the Ground Plane by placing vias once per 2mm at least;
- Place EM noisy devices as far as possible from GE864-QUAD / PY antenna line;
- Keep the antenna line far away from the GE864-QUAD / PY power supply lines;
- If you have EM noisy devices around the PCB hosting the GE864-QUAD / PY, such as fast switching ICs, take care of the shielding of the antenna line by burying it inside the layers of PCB and surround it with Ground planes, or shield it with a metal frame cover.
- If you don't have EM noisy devices around the PCB of GE864-QUAD / PY, by using a strip-line on the superficial copper layer for the antenna line, the line attenuation will be lower than a buried one;

Reproduction forbidden without Telit Communications S.p.A. written authorization - All Rights Reserved

6.3 GSM Antenna - Installation Guidelines

- Install the antenna in a place covered by the GSM signal.
- The Antenna must be installed to provide a separation distance of at least 20 cm from all persons and must not be co-located or operating in conjunction with any other antenna or transmitter;
- Antenna shall not be installed inside metal cases
- Antenna shall be installed also according Antenna manufacturer instructions.

Reproduction forbidden without Telit Communications S.p.A. written authorization - All Rights Reserved

7 Logic level specifications

Where not specifically stated, all the interface circuits work at 2.8V CMOS logic levels. The following table shows the logic level specifications used in the **Telit GE864-QUAD / PY** interface circuits:

Absolute Maximum Ratings -Not Functional

Parameter	Min	Max
Input level on any digital pin when on	-0.3V	+3.6V
Input voltage on analog pins when on	-0.3V	+3.0 V
Voltage on Buffered pins	-0.3V	25V

Operating Range - Interface levels (2.8V CMOS)

Level	Min	Max
Input high level	2.1V	3.3V
Input low level	0V	0.5V
Output high level	2.2V	3.0V
Output low level	0V	0.35V

For 2,0V signals:

Operating Range - Interface levels (2.0V CMOS)

Level	Min	Max
Input high level	1.6V	3.3V
Input low level	0V	0.4V
Output high level	1,65V	2.2V
Output low level	0V	0.35V

Current characteristics

Level	Typical
Output Current	1mA
Input Current	1uA

Reproduction forbidden without Telit Communications S.p.A. written authorization - All Rights Reserved

7.1 Reset signal

Signal	Function	I/O	Bga Ball
RESET	Phone reset	I	A2

RESET is used to reset the **GE864-QUAD / PY modules**. Whenever this signal is pulled low, the GE864-QUAD / PY is reset. When the device is reset it stops any operation. After the release of the reset GE864-QUAD / PY is unconditionally shut down, without doing any detach operation from the network where it is registered. This behaviour is not a proper shut down because any GSM device is requested to issue a detach request on turn off. For this reason the Reset signal must not be used to normally shutting down the device, but only as an emergency exit in the rare case the device remains stuck waiting for some network response.
The RESET is internally controlled on start-up to achieve always a proper power-on reset sequence, so there's no need to control this pin on start-up. It may only be used to reset a device already on that is not responding to any command.

***NOTE**: do not use this signal to power off the **GE864-QUAD / PY**. Use the ON/OFF signal to perform this function or the AT#SHDN command.*

Reset Signal Operating levels:

Signal	Min	Max
RESET Input high	2.0V*	2.2V
RESET Input low	0V	0.2V

* this signal is internally pulled up so the pin can be left floating if not used.

If unused, this signal may be left unconnected. If used, then it **must always be connected with an open collector transistor**, to permit to the internal circuitry the power on reset and under voltage lockout functions.

Reproduction forbidden without Telit Communications S.p.A. written authorization - All Rights Reserved

8 Serial Ports

The serial port on the Telit GE864-QUAD/PY is the core of the interface between the module and OEM hardware.
2 serial ports are available on the module:

- MODEM SERIAL PORT
- MODEM SERIAL PORT 2 (DEBUG)

8.1 MODEM SERIAL PORT

Several configurations can be designed for the serial port on the OEM hardware, but the most common are:

- RS232 PC com port
- microcontroller UART @ 2.8V - 3V (Universal Asynchronous Receive Transmit)
- microcontroller UART@ 5V or other voltages different from 2.8V

Depending from the type of serial port on the OEM hardware a level translator circuit may be needed to make the system work. The only configuration that doesn't need a level translation is the 2.8V UART.
The serial port on the GE864-QUAD/PY is a +2.8V UART with all the 7 RS232 signals. It differs from the PC-RS232 in the signal polarity (RS232 is reversed) and levels. The levels for the GE864-QUAD/PY UART are the CMOS levels:

Absolute Maximum Ratings -Not Functional

Parameter	Min	Max
Input level on any digital pad when on	-0.3V	+3.6V
Input voltage on analog pads when on	-0.3V	+3.0 V

Operating Range - Interface levels (2.8V CMOS)

Level	Min	Max
Input high level V_{IH}	2.1V	3.3V
Input low level V_{IL}	0V	0.5V
Output high level V_{OH}	2.2V	3.0V
Output low level V_{OL}	0V	0.35V

Reproduction forbidden without Telit Communications S.p.A. written authorization - All Rights Reserved

The signals of the GE864 serial port are:

RS232 Pin Number	Signal	GE864-QUAD / PY Pad Number	Name	Usage
1	DCD - dcd_uart	D9	Data Carrier Detect	Output from the GE864-QUAD / PY that indicates the carrier presence
2	RXD - tx_uart	H8	Transmit line *see Note	Output transmit line of GE864-QUAD / PY UART
3	TXD - rx_uart	E7	Receive line *see Note	Input receive of the GE864-QUAD / PY UART
4	DTR - dtr_uart	B7	Data Terminal Ready	Input to the GE864-QUAD / PY that controls the DTE READY condition
5	GND	A1,F1,H1,L1, H2, L2, J3, K3….	Ground	ground
6	DSR - dsr_uart	E11	Data Set Ready	Output from the GE864-QUAD / PY that indicates the module is ready
7	RTS - rts_uart	F7	Request to Send	Input to the GE864-QUAD / PY that controls the Hardware flow control
8	CTS - cts_uart	F6	Clear to Send	Output from the GE864-QUAD / PY that controls the Hardware flow control
9	RI - ri_uart	B6	Ring Indicator	Output from the GE864-QUAD / PY that indicates the incoming call condition

NOTE: According to V.24, RX/TX signal names are referred to the application side, therefore on the GE864 side these signal are on the opposite direction: TXD on the application side will be connected to the receive line (here named TXD/ rx_uart) of the GE864 serial port and viceversa for RX.

TIP: For a minimum implementation, only the TXD and RXD lines can be connected, the other lines can be left open provided a software flow control is implemented.

Reproduction forbidden without Telit Communications S.p.A. written authorization - All Rights Reserved

8.2 RS232 level translation

In order to interface the Telit GE864 with a PC com port or a RS232 (EIA/TIA-232) application a level translator is required. This level translator must

- invert the electrical signal in both directions
- change the level from 0/3V to +15/-15V

Actually, the RS232 UART 16450, 16550, 16650 & 16750 chipsets accept signals with lower levels on the RS232 side (EIA/TIA-562) , allowing for a lower voltage-multiplying ratio on the level translator. Note that the negative signal voltage must be less than 0V and hence some sort of level translation is always required.
The simplest way to translate the levels and invert the signal is by using a single chip level translator. There are a multitude of them, differing in the number of driver and receiver and in the levels (be sure to get a true RS232 level translator not a RS485 or other standards).
By convention the driver is the level translator from the 0-3V UART level to the RS232 level, while the receiver is the translator from RS232 level to 0-3V UART.

In order to translate the whole set of control lines of the UART you will need:

- 5 driver
- 3 receiver

NOTE: The digital input lines working at 2.8VCMOS have an absolute maximum input voltage of 3,75V; therefore the level translator IC shall not be powered by the +3.8V supply of the module. Instead it shall be powered from a +2.8V / +3.0V (dedicated) power supply.
This is because in this way the level translator IC outputs on the module side (i.e. GE864 inputs) will work at +3.8V interface levels, stressing the module inputs at its maximum input voltage.
This can be acceptable for evaluation purposes, but not on production devices.

NOTE: In order to be able to do in circuit reprogramming of the GE864 firmware, the serial port on the Telit GE864 shall be available for translation into RS232 and either it's controlling device shall be placed into tristate, disconnected or as a gateway for the serial data when module reprogramming occurs.
Only RXD, TXD, GND and the On/off module turn on pad are required to the reprogramming of the module, the other lines are unused.
All applicator shall include in their design such a way of reprogramming the GE864.

Reproduction forbidden without Telit Communications S.p.A. written authorization - All Rights Reserved

An example of level translation circuitry of this kind is:

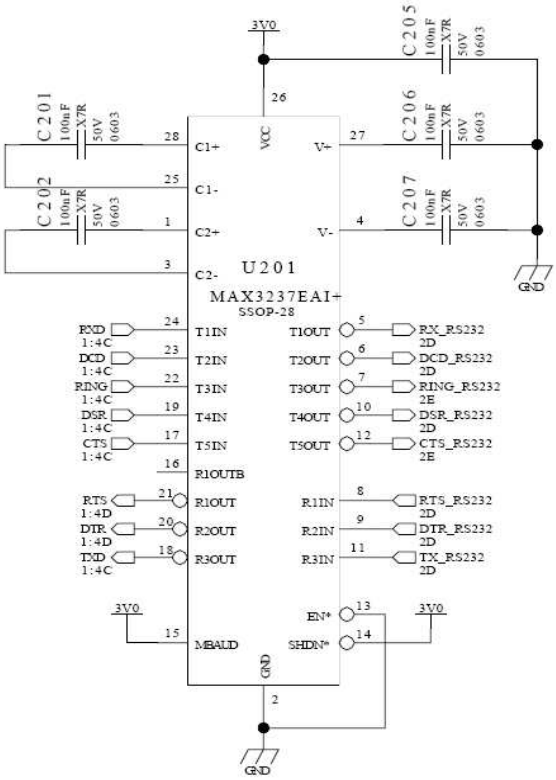

RS232 LEVEL TRSANSLATOR

The RS232 serial port lines are usually connected to a DB9 connector with the following layout:

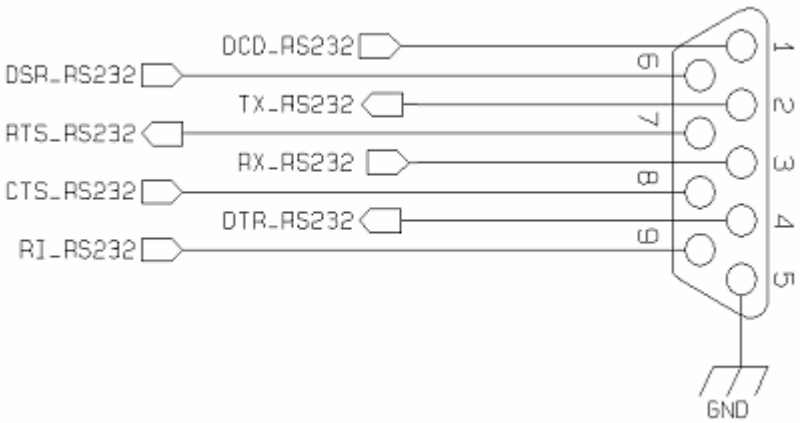

Reproduction forbidden without Telit Communications S.p.A. written authorization - All Rights Reserved

8.3 5V UART level translation

If the OEM application uses a microcontroller with a serial port (UART) that works at a voltage different from 2.8 - 3V, then a circuitry has to be provided to adapt the different levels of the two set of signals. As for the RS232 translation there are a multitude of single chip translators. For example a possible translator circuit for a 5V TRANSMITTER/RECEIVER can be:

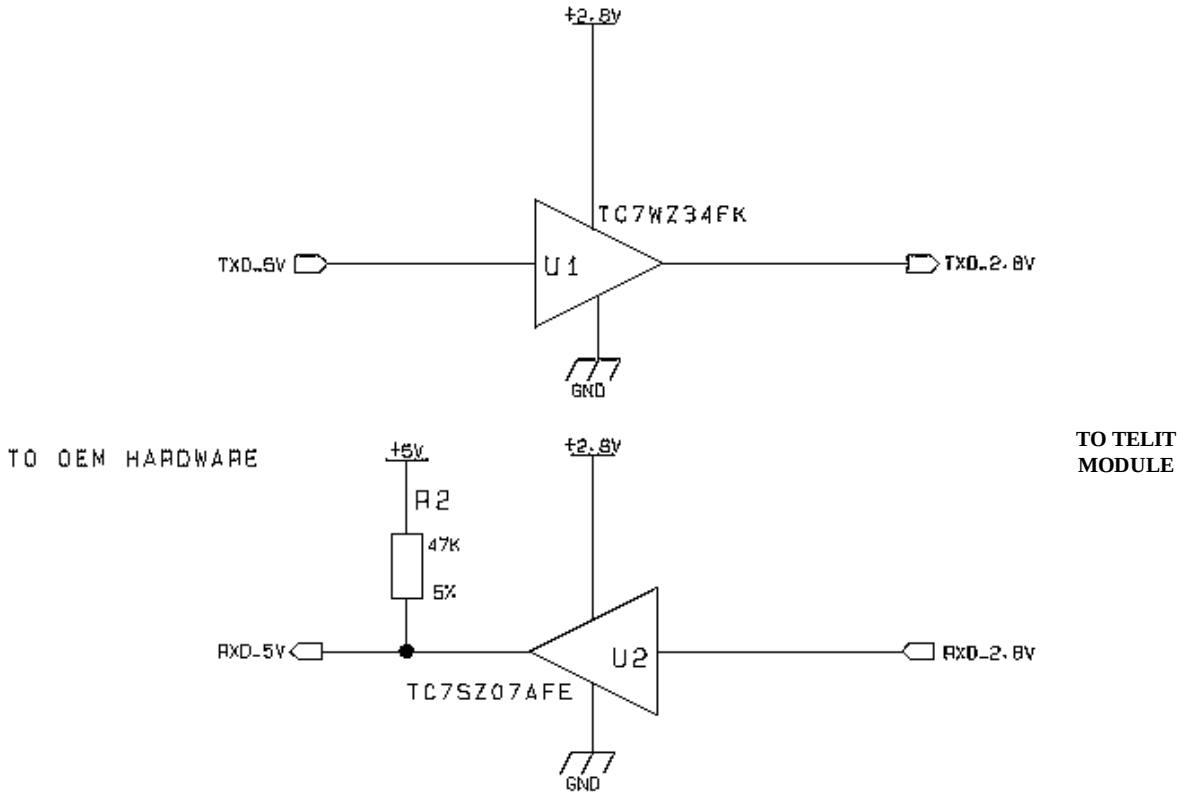

TIP: This logic IC for the level translator and 2.8V pull-ups (not the 5V one) can be powered directly from PWRMON line of the GE864-QUAD / PY. Note that the TC7SZ07AE has open drain output, therefore the resistor R2 is mandatory.

Reproduction forbidden without Telit Communications S.p.A. written authorization - All Rights Reserved

NOTE: The UART input line TXD (rx_uart) of the GE864-QUAD / PY is NOT internally pulled up with a resistor, so there may be the need to place an external 47KΩ pull-up resistor, either the DTR (dtr_uart) and RTS (rts_uart) input lines are not pulled up internally, so an external pull-up resistor of 47KΩ may be required.

A power source of the internal interface voltage corresponding to the 2.8VCMOS high level is available at the PWRMON pin on the connector, whose absolute maximum output current is 1mA.
A maximum of 9 resistors of 47 KΩ pull-up can be connected to the PWRMON pin, provided no other devices are connected to it and the pulled-up lines are GE864-QUAD / PY input lines connected to open collector outputs in order to avoid latch-up problems on the GE864-QUAD / PY.
Care must be taken to avoid latch-up on the GE864-QUAD / PY and the use of this output line to power electronic devices shall be avoided, especially for devices that generate spikes and noise such as switching level translators, micro controllers, failure in any of these condition can severely compromise the GE864-QUAD / PY functionality.

NOTE: The input lines working at 2.8VCMOS can be pulled-up with 47KΩ resistors that can be connected directly to the PWRMON line provided they are connected as in this example.
NO OTHER devices than those suggested should be powered with the PWRMON line; otherwise the module functionality may be compromised.

It is important to consider that the added circuit must have consumption lower than 1mA.
In case of reprogramming of the module has to be considered the use of the RESET line to start correctly the activity.

The preferable configuration is having an external supply for the buffer.

Reproduction forbidden without Telit Communications S.p.A. written authorization - All Rights Reserved

9 Audio Section Overview

The Base Band Chip of the GE864-QUAD / PY Telit Module provides two different audio blocks; both in transmit (*Uplink*) and in receive (*Downlink*) direction:

"*MT lines*" should be used for handset function,

"*HF lines*" is suited for hands -free function (car kit).

These two blocks can be active only one at a time, selectable by *AXE* hardware line or by AT command.The audio characteristics are equivalent in transmit blocks, but are different in the receive ones and this should be kept in mind when designing.

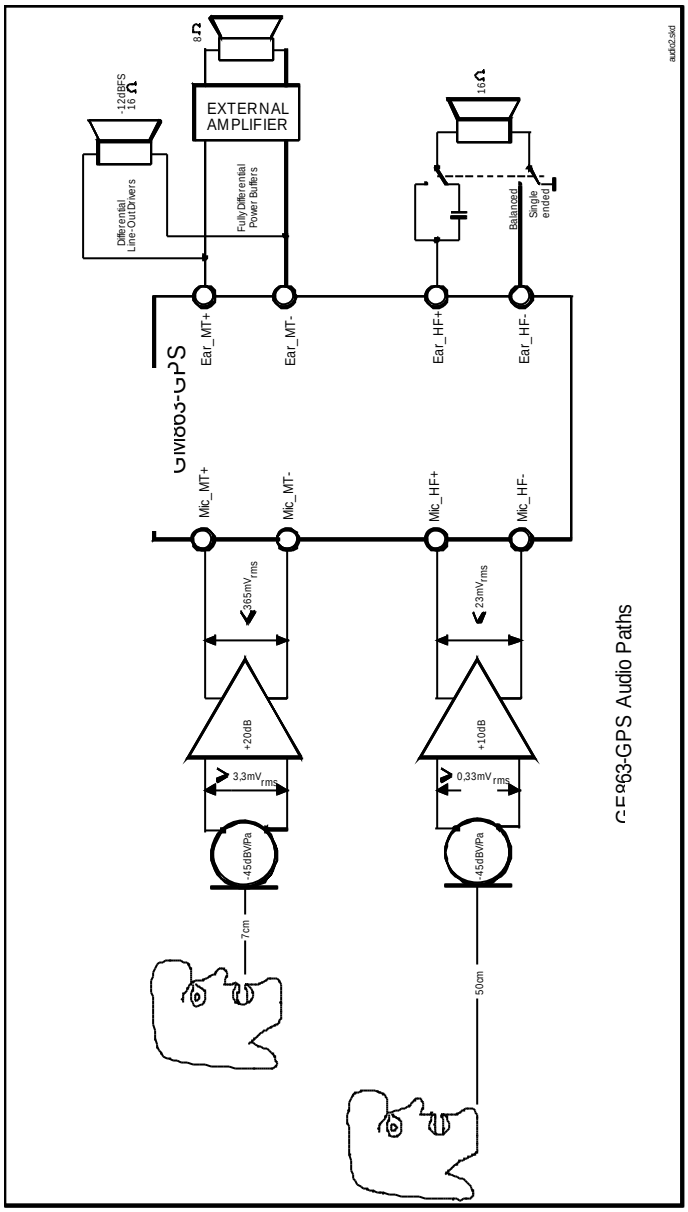

9.1 Microphone Paths Characteristic and Requirements

TIP: being the microphone circuitry the more noise sensitive , its design and layout must be done with particular care. Both microphone paths are balanced and the OEM circuitry should be balanced designed to reduce the common mode noise typically generated on the ground plane. However also an unbalanced circuitry can be used for particular OEM application needs .

TIP: due to the difference in the echo canceller type, the "Mic_MT" audio path is suited for Handset applications, while the "Mic_HF"audio path is suited for hands-free function (car kit). The Earphone applications should be made using the "Mic_HF" audio path but DISABLING the echo canceller by software AT command. If the echo canceller is left active with the Earphone, then some echo might be introduced by the echo cancel algorithm.

"Mic_MT" 1st differential microphone path

- **line coupling** — **AC**
- **line type** — **balanced**
- **coupling capacitor** — **≥ 100nF**
- **differential input resistance** — **50kΩ**
- **differential input voltage** — **≤ 1,03V_{pp} (365mV_{rms})**
- **microphone nominal sensitivity** — **-45 dBV_{rms}/Pa**
- **analog gain suggested** — **+ 20dB**
- **echo canceller type** — **handset**

"Mic_HF" 2nd differential microphone path

- **line coupling** — **AC**
- **line type** — **balanced**
- **coupling capacitor** — **≥ 100nF**
- **differential input resistance** — **50kΩ**
- **differential input voltage** — **≤ 65mV_{pp} (23mV_{rms})**
- **microphone nominal sensitivity** — **-45 dBV_{rms}/Pa**
- **analog gain suggested** — **+10dB**
- **echo canceller type** — **car kit hands-free**

Reproduction forbidden without Telit Communications S.p.A. written authorization - All Rights Reserved

TIP: definition of the nominal sensitivity of the microphone lines .

The nominal sensitivity of the microphone lines indicates the voltage level on the GE864-QUAD / PY pins present during "*normal spoken*" conditions.
For a handset , the "*normal spoken*" conditions take place when the talker mouth is 7cm far from the microphone ; under these conditions the voice will produce an acoustic pressure of *-4,7dBPa @1kHz* on the microphone membrane .

TIP: electrical equivalent signal and operating voice levels .

At "*normal spoken*" conditions, a microphone having the suggested nominal sensitivity of -*45dBV$_{rms}$/Pa* , will produce

the electrical equivalent signal : $MicLevel = (-45) + (-4.7) = -49.7\ dB_{Vrms}$

that means : $MicVoltage = 10^{(-49.7/20)} = 3.3 * 10^{-3}\ V_{rms}$

During a call, this level varies according to the volume of the talker voice; usually the following rough thumb rule for the dynamic range may be used :

1) the talker is screaming . This is the *strongest voice level* condition: the signal increases by +20dB;
2) the talker is whispering. This is the *lowest voice level* condition: the voice level decreases by –50dB.

These changes must be considered for designing the external microphone amplifier.

TIP: example of external microphone amplifier calculation .

Let's suppose to use the *1stdifferential* microphone path .In this case the maximum differential input voltage to "*Mic_MT*" lines is 365mV$_{rms}$(1,03V$_{pp}$) corresponding to –8,76dBV.
Now we can calculate the maximum voltage gain of an external microphone amplifier G_A :

$$[(MicLevel + 20dB) + G_A] = -8{,}76dBV$$

$$[-49{,}7 + 20 + G_A] = -8{,}76$$

$$-40{,}9 + 20 = -G_A$$

$$\boxed{G_A = 20{,}94dB} \longrightarrow$$ you can set G_A= ***+20dB*** to use standard resistor values .

Reproduction forbidden without Telit Communications S.p.A. written authorization - All Rights Reserved

TIP: environment consideration .

For *hands-free/car kit* microphone, you must take into account the voice attenuation, due to the distance between the microphone itself and the talker, when designing the external microphone amplifier.
Not only, you must consider that the microphone will pick up also ambient noise; to overcome this problem it is preferable to set the gain of the microphone *10dB* lower with respect to the calculated value for a nominal sensitivity. The corresponding reduction in signal level will be compensated by an increased voice volume of the talker which will speak louder because of the ambient noise.
For a car cabin usually the distance between the microphone itself and the talker is *40/50cm*; in these conditions the attenuation can be considered as a thumb rule around *20dB* .

For the earphone we shall distinguish two different types: the earphones having the microphone sustained close to the mouth and the ones having the microphone on the earpiece cable.
The same considerations for the additional voice attenuation due to the distance from the microphone and the noise pick up can be made for the earphone having the microphone on the earpiece cable, while the other kind of earphone shall be threaten as an handset.

TIP: how to compensate the losses in car cabin hands-free condition .

The voice signal , that in the "normal spoken" conditions produces on the microphone membrane an acoustic pressure of -4,7dBPa at 1kHz , will have a further attenuation of 20dB due the 50cm distance .

Therefore a microphone having the suggested nominal sensitivity of -45dBV_{rms}/Pa, will produce a lower electrical

equivalent signal : $MicLevel = (-45) + (-4.7) - 20 = -69.7$

that means : $MicVoltage = 10^{(-49.7/20)} = 0{,}33 * 10^{-3}$

Setting the "microphone gain" at +10dB (3 times), the signal in the nominal conditions on the "Mic_HF" inputs s of GE864-QUAD / PY Telit Module will be :

"***Mic_HF***" $Level = 0{,}33 * 10^{-3} * 3 = 1 * 10^{-3}$

Hence in these conditions the signal level on the"***Mic_HF***" input pads of the GE864-QUAD / PY is 10 dB (3 times) lower than the nominal, as suggested.

Reproduction forbidden without Telit Communications S.p.A. written authorization - All Rights Reserved

9.2 General Design Rules

There are several configurations for the audio paths, but the most effective difference is between balanced and unbalanced microphone configuration.
It is highly recommended to keep the whole microphone path balanced even if this means having 2 wires connecting the microphone instead of one needed (plus ground) in the unbalanced case. The balanced circuitry is more suited because of its good common mode noise rejection, reducing the *216 Hz* burst noise produced during the GSM transmissions.

- Where possible use balanced microphone circuitry
- Keep the microphone traces on the PCB and wires as short as possible.
- If your application requires an unbalanced microphone, then keep the lines on the PCB balanced and "unbalance" the path close to the microphone wire connector if possible.
- For the microphone biasing voltage use a dedicated voltage regulator and a capacitor multiply circuit.
- Make sure that the microphone traces in the PCB don't cross or run parallel to noisy traces (especially the power line)
- If possible put all around to the microphone lines a ground trace connected to the ground plane by several vias. This is done in order to simulate a shielded trace on the PCB.
- The biasing circuit and eventually the buffer can be designed in the same manner for the internal and external microphones.

9.3 Other considerations

If your application is a hands-free/car kit scenario, but you need to put microphone and speaker inside the same box:

- Try to have the maximum possible distance between them, at least 7cm;
- Due to the fact the microphone type is very important, if you use an omni-directional one (and this is the typical application) please seal it on the rear side (no back cavity) in order not to collect unwanted signals;
- Try to make divergent the main axes of the two devices.

Reproduction forbidden without Telit Communications S.p.A. written authorization - All Rights Reserved

9.4 Microphone Biasing

The electret microphones usually need a biasing voltage to work properly. Refer to your microphone provider for the characteristics required.

NOTE: The microphones have a hot wire were the positive biasing must be connected. Usually it is indicated by a + symbol or a red point. If the polarity of the bias is reversed, then the microphone will not work properly. For this reason be sure to respect the mic. biasing polarity.

9.4.1 Balanced Microphone Biasing

The balanced microphone bias voltage should be obtained from a dedicated voltage regulator, in order to eliminate the noise present on the power lines. This regulator can be the same for all the audio paths. The microphone should be supplied from a capacitor multiply circuit.
For example a circuit for the balanced microphone biasing can be:

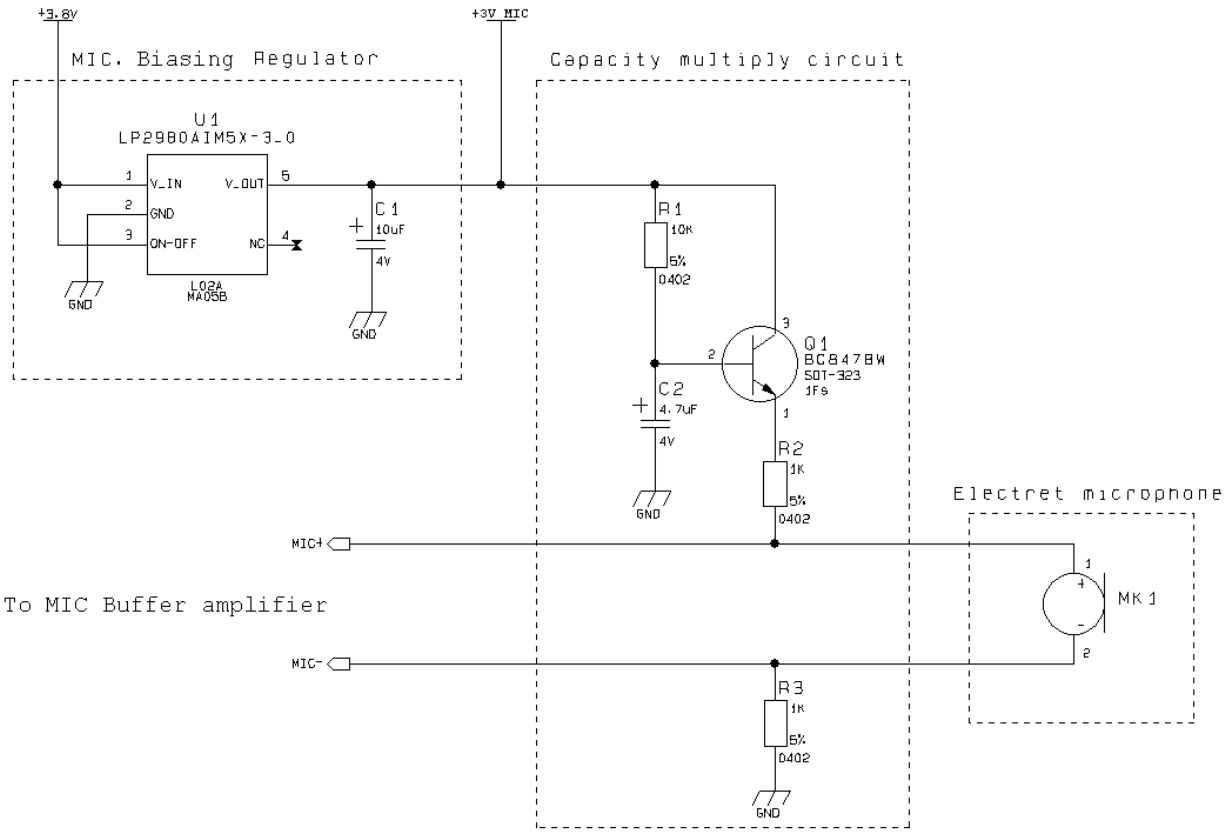

Reproduction forbidden without Telit Communications S.p.A. written authorization - All Rights Reserved

NOTE: In the balanced application the resistors R2 and R3 must have the same value to keep the circuit balanced.

NOTE: The cable to the microphone should not be shielded, instead a twisted pair cable shall be used.

NOTE: The microphone sensitivity changes with the value of R2 and R3. Usually the microphones are characterized with 2kΩ biasing resistance, so try to keep the sum of R2 and R3 around 2kΩ. Refer to your microphone manufacturer for the mic. characteristics.

9.4.2 Unbalanced Microphone Biasing

The unbalanced microphone biasing voltage should be obtained from a dedicated voltage regulator, in order to eliminate the noise present on the power lines. This regulator can be the same for all the audio paths. The microphone should be supplied from a capacitor multiply circuit.
For example a circuit for the unbalanced microphone biasing can be:

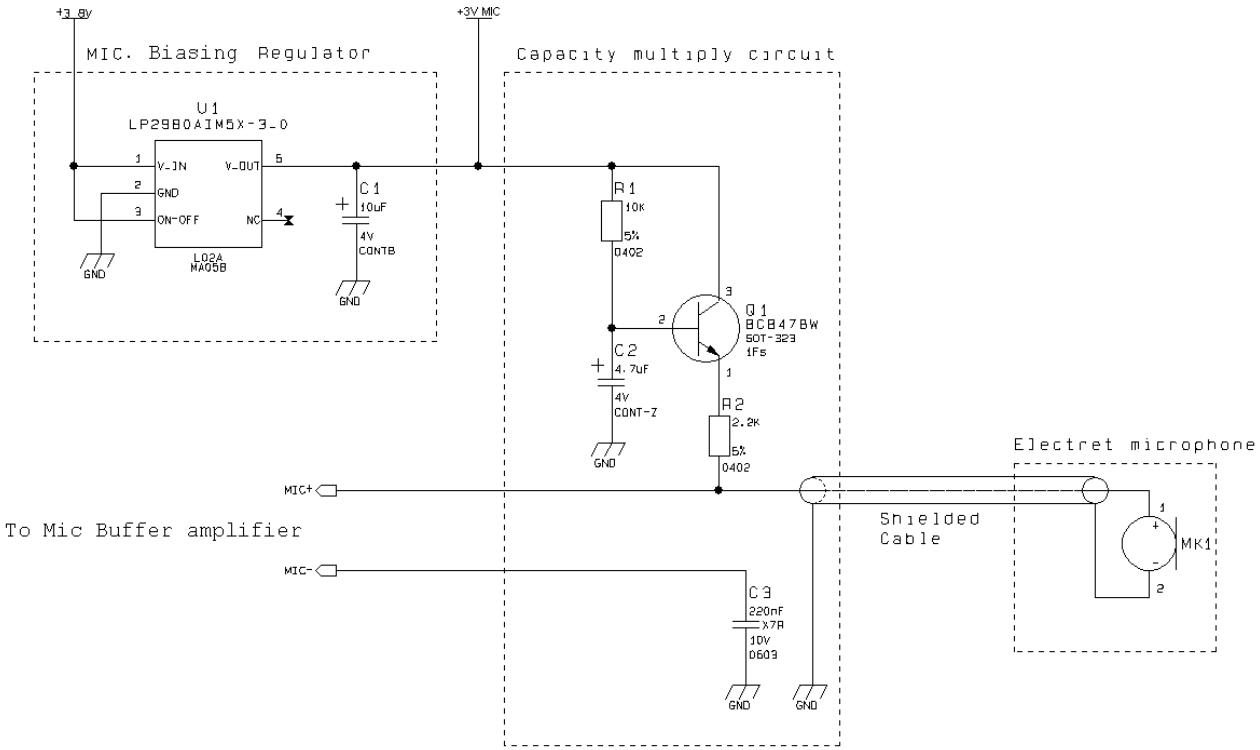

NOTE: In the unbalanced application the capacitor C3 shall be > 200nF otherwise the frequency response will be cut at low band frequencies (down to 300Hz). This capacitor can be placed close to the MIC- pad (MIC_HF- or MIC_MT- depending on the audio path chosen) or if possible it should be placed close to the shielded cable connector. If the ground return path is well designed, then it is possible to eliminate the C3 capacitor, provided the buffer is close to the mic. input.

NOTE: The cable to the microphone should be shielded.

NOTE: The microphone changes with the value of R2. Usually the microphone sensitivity is characterized with 2kΩ biasing resistance, so try to keep the value of R2 around 2kΩ. For mic. characteristics refer to the manufacturer.

Reproduction forbidden without Telit Communications S.p.A. written authorization - All Rights Reserved

9.5 Microphone Buffering

As seen previously, a microphone shall be connected to the input pins of the GE864-QUAD / PY through a buffer amplifier that boosts the signal level to the required value.
Again the buffered microphone circuitry can be balanced or unbalanced: where possible it is always preferable a balanced solution. The buffering circuit shall be placed close to the microphone or close to the microphone wire connector.

9.5.1 Buffered Balanced Mic

A sample circuit can be:

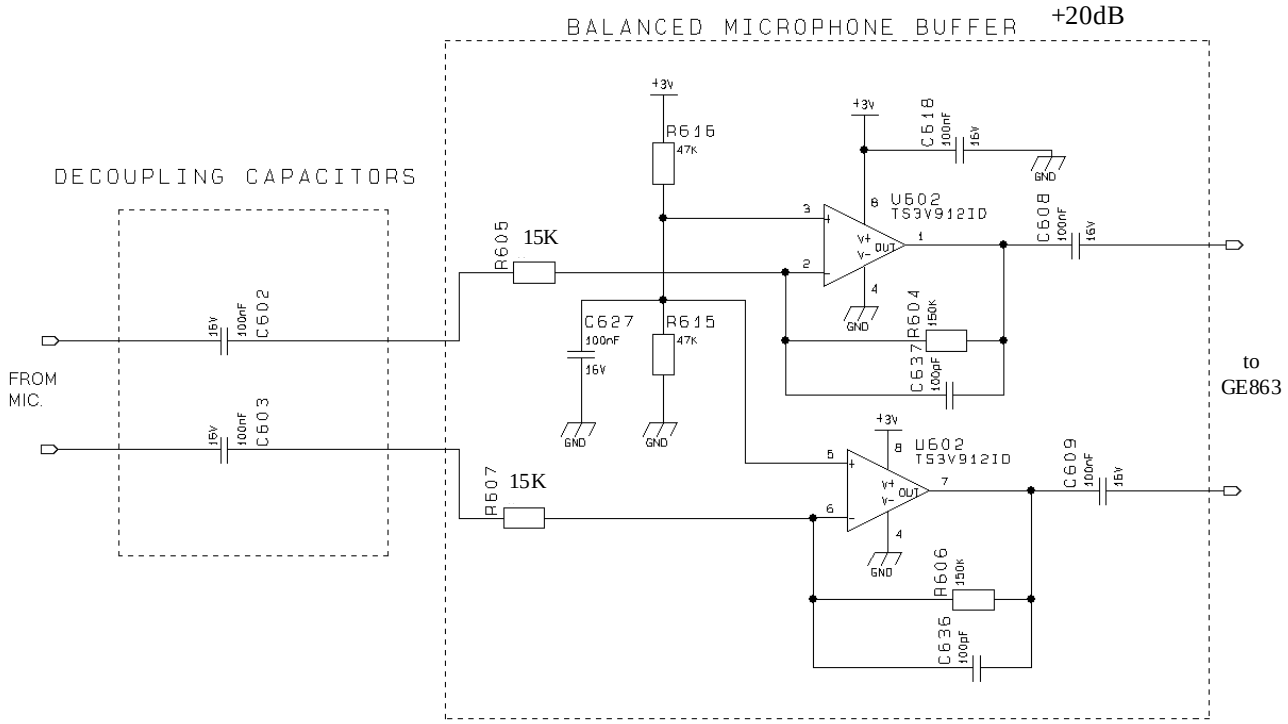

This circuit has a gain of 10 times (+20 dB), and is therefore suited for the "***Mic_MT*** " input if you have a microphone with a sensitivity close to the suggested one *(-45 dBV$_{rms}$/Pa*). If your microphone has a different sensitivity or if the buffer is connected to the "***Mic_HF*** " inputs, then a gain adjustment shall be done by changing resistors R604 and R606 (if the required value is not a standard one , you can change R605 e R607) and as a consequence the capacitors C636 and C637 to maintain the bandwidth 150-4000Hz (at -3dB).

Reproduction forbidden without Telit Communications S.p.A. written authorization - All Rights Reserved

The buffer gain is given by the formula:

$$Gain = \frac{R604}{R605} = \frac{R606}{R607}$$

The C636 and C637 capacitors are placed in order to cut off the gain at higher frequencies than the transmitted GSM band, the cutoff frequency (-3dB) should be 3500Hz in order to have -1dB at 3kHz. The cutoff frequency is given by the formula:

$$freq. = \frac{1}{2\pi * R604 * C637} = \frac{1}{2\pi * R606 * C636} \text{ [Hz]}$$

TIP: example of calculation .

*Let's assume you have a microphone with a sensitivity of -45 dBV_{rms}/Pa and you want to use it in 1st differential microphone path ("**Mic_MT**" inputs) in "normal spoken" conditions at acoustic pressure of -4.7dBPa.*
As reported at page 33 , the electrical level output from the microphone will be :

$$MicLevel = (-45) + (-4.7) = -49.7\ dB_{Vrms}$$

corresponding to:

$$MicVoltage = 10^{(-49.7/20)} = 3.3 * 10^{-3}\ V_{rms}$$

*When the talker is screaming ,we will have a signal of 330 mV_{rms} on the "**Mic_MT**" inputs due to a 20dB higher Mic Level (see TIP 1) with a buffer gain G_A :*

$$G_A = 20 \log (AmplifierOutput / MicVoltage) = 20 \log (330 * 10^{-3})/(33 * 10^{-3}) = 20 \log 10 = \mathbf{20dB}$$

The corresponding values for the resistors on the buffer could be (if we keep the input resistance 10kΩ)

$$R604 = R606 = gain * R607 = gain * R605 = 10 * 15 = 150\ k\Omega$$

The commercial values of 150kΩ & 15kΩ are then chosen.

As a consequence the values of the capacitors C636 and C637 shall be:

$$C636 = C637 = 1/(2\pi * 4000 * R606) = 265 * 10^{-12}\ F$$

A commercial value of 270pF gives a cutoff frequency of 3931Hz with an errorless than 1,8% .

Reproduction forbidden without Telit Communications S.p.A. written authorization - All Rights Reserved

9.5.2 Buffered Unbalanced (Single Ended) Microphone .

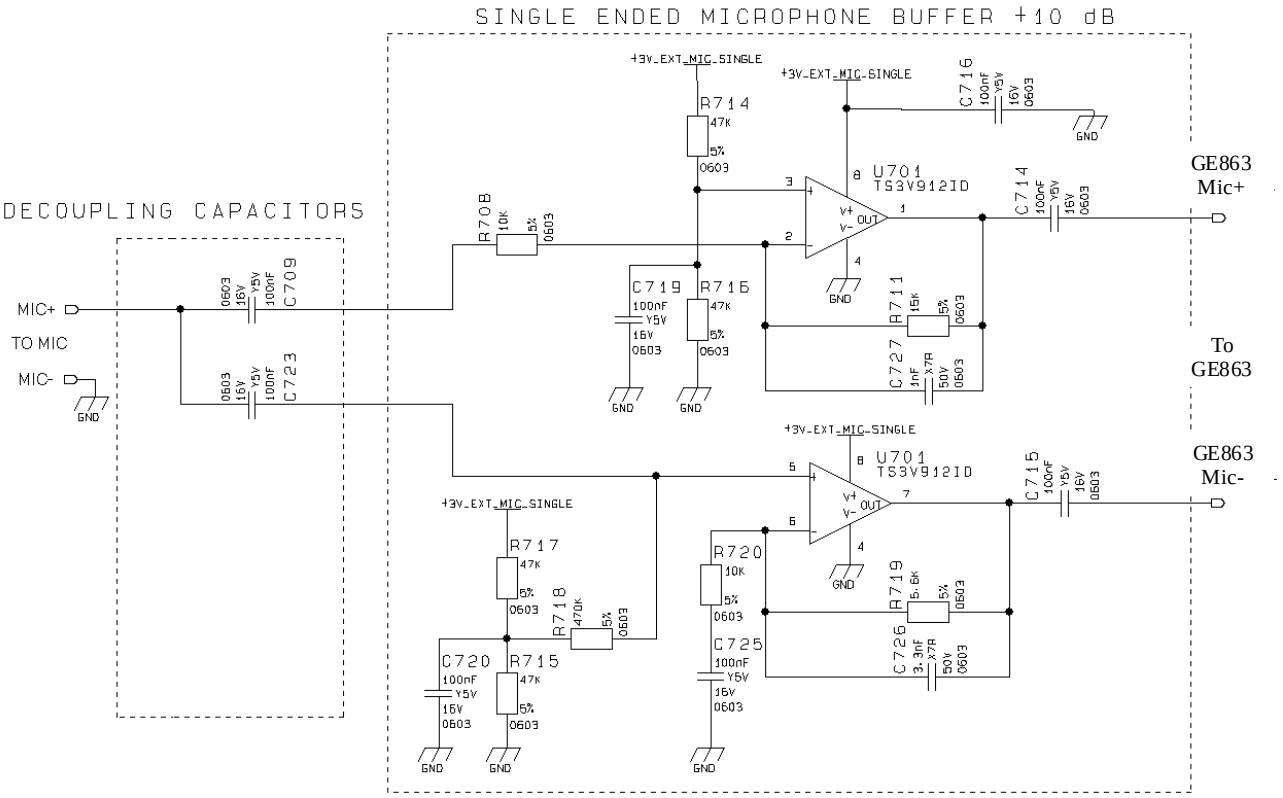

The above schematic can be used for a single ended (*buffered unbalanced*) microphone ; the required biasing circuitry is not included. Note also that the capacitor C3 is not needed .
The gains of the two amplifiers are given by the formulas :

$$Gain(\text{not inverting buffer}) = 1 + \frac{R719}{R720} \qquad Gain(\text{inverting buffer}) = \frac{R711}{R708}$$

Assigning half of overall gain to each amplifier, you will obtain the requested gain because of doubling the microphone signal path; in fact by the use of two amplifiers (the upper as “inverting” and the lower as “not inverting” configuration) we obtain an additional +6dB gain (2 times) .

Remember: the “not inverting“ amplifier section gain shall not be less than 1 .
Like for the balanced buffered microphone, the amplifier overall gain can be modify changing the value of resistor R719/R720 and R711 and as a consequence the capacitors C726 and C727. It is advisable to change R708 only if you have difficulty to find a commercial value for R711; in this case change R708 as little as possible.

The -3dB bandwidth is given by the approximated formula (considering C725 >> C726):

Reproduction forbidden without Telit Communications S.p.A. written authorization - All Rights Reserved

$$freq. = \frac{1}{2\pi * R719 * C726} = \frac{1}{2\pi * R711 * C727} \text{ [Hz]}$$

The buffer bandwidth at -3dB shall be 4KHz.
Note that the biasing of the operational amplifier is given for the inverting amplifier by the series divider R714-R715. The 100nF capacitor C719 is needed to filter the noise that could be coupled to that divider. For the not inverting operational amplifier the biasing is given by a different divider R715-R717 with the capacitor C720 and through a series resistor R718 of 470KΩ.

TIP: example of calculation.

*Let's assume you have a microphone with a sensitivity of -45dBV$_{rms}$/Pa and you want to use it in 2nd differential microphone path ("**Mic_HF**" inputs) in "normal spoken" conditions at acoustic pressure of -4.7dBPa.*
As reported at page XX , the electrical level output from the microphone will be :

$$MicLevel = (-45) + (-4.7) = -49.7\ dBV_{rms}$$

but we have to consider 20dB loss due to the higher distance from the mouth of the talker (50cm) .

$$MicLevel = (-49.7) + (-20) = -69.7\ dBV_{rms}$$

corresponding to $MicVoltage = 10^{(-69.7/20)} = 0{,}33 * 10^{-3}$

*In order to have a signal of 1 mV$_{rms}$ at the **"Mic_HF"** inputs , as suggested at **TIP** "**environment consideration** ",*

the buffer must have a gain $G_A = \text{"Mic_HF"} / MicVoltage = (1*10^{-3})/(0{,}33*10^{-3}) = 3$ *or +10 dB*

*Keeping in mind that " balancing the line will double the signal", to calculate the resistor values assign half of required gain **G_A** to each amplifier section . And therefore **G_S** =1,5times (or +3,52dB) .*

Choosing as 10kΩ as the input resistance , the corresponding values for the resistors on the buffer will be :

$$R711 = G_S * R708 = 1.5*10 = 15\ k\Omega$$

$$R719 = (G_S - 1) * R720 = (1.5 - 1)*10 = 5\ k\Omega$$

*The commercial values of **15kΩ** and **5.6kΩ** be accepted .*

Reproduction forbidden without Telit Communications S.p.A. written authorization - All Rights Reserved

As a consequence of the assigned values of the resistors, the nominal values of C726 and C727 are :

$$C726 = 1/(2\pi * 4000 * R719) = 7.10 * 10^{-9}\ F$$

$$C727 = 1/(2\pi * 4000 * R711) = 2{,}65 * 10^{-9}\ F$$

modified in ***6,8nF*** *(f_{c1}=4181Hz) and* ***2,7nF*** *(f_{c2}=3931Hz) because of commercial values .*

Reproduction forbidden without Telit Communications S.p.A. written authorization - All Rights Reserved

10 OUTPUT LINES (Speaker)

10.1Short description

The Telit GE864-QUAD / PY provides two audio paths in receive section. Only one of the two paths can be active at a time, selectable by *AXE* hardware line or by AT command.

You must keep in mind the different audio characteristics of the receive blocks when designing :

→ the *"**Ear_MT**"* lines *EPN1* and *EPP1* are the *Differential Line-Out Drivers* ; they can drive an external amplifier or directly a ***16 Ω earpiece*** at –12dBFS (*) ;
→ the "***Ear_HF***" lines *EPPA1_2* and *EPPA2* are the *Fully Differential Power Buffers ;* they can directly drive a *16**Ω** speaker* in differential (*balanced*) or single ended (*unbalanced*) operation mode .

(*) *FS* : acronym of *Full Scale.* It is equal to 0dB, the maximum Hardware Analog Receive Gain of BaseBand Chip.

The *"**Ear_MT**"* audio path should be used for handset function, while the "***Ear_HF***" audio path is suited for hands-free function (car kit).

Both receiver outputs are B.T.L. type (Bridged Tie Load) and the OEM circuitry shall be designed bridged to reduce the common mode noise typically generated on the ground plane and to get the maximum power output from the device; however also a single ended circuitry can be designed for particular OEM application needs.

Reproduction forbidden without Telit Communications S.p.A. written authorization - All Rights Reserved

10.2 Output Lines Characteristics

"Ear_MT" Differential Line-out Drivers Path

- line coupling: DC
- line type: bridged
- output load resistance : ≥ 14 Ω
- internal output resistance: 4 Ω (typical)
- signal bandwidth: 150 - 4000 Hz @ -3 dB
- max. differential output voltage 1310 mV_{rms} (typ, open circuit)
- differential output voltage 328mVrms /16 Ω @ -12dBFS
- SW volume level step - 2 dB
- number of SW volume steps 10

"Ear_HF" Power Buffers path

- line coupling: DC
- line type: bridged
- output load resistance : ≥ 14 Ω
- internal output resistance: 4 Ω (>1,7 Ω)
- signal bandwidth: 150 - 4000 Hz @ -3 dB
- max. differential output voltage 1310 mV_{rms} (typ, open circuit)
- max. single ended output voltage 656 mV_{rms} (typ, open circuit)
- SW volume level step - 2 dB
- number of SW volume steps 10

Reproduction forbidden without Telit Communications S.p.A. written authorization - All Rights Reserved

10.3 General Design Rules

There are several configurations for the audio output path, but the various design requirements can be grouped into three different categories:

- handset earphone (low power, typically a handset)
- hands-free earphone (low power, typically a earphone)
- car kit speakerphone (high power, typically a speaker)

The three groups have different power requirements, usually the first two applications need only few mW of power, which can be directly drained from the GE864-QUAD / PY pads, provided a suited speaker is used. This direct connect design is the cheaper and simpler solution and will be suited for the most of the earphone design requirements. There's no need to decouple the output ear lines if a suited earpiece is connected. For the last group, the speakerphone, a power amplifier is required to raise the output power up to 5-10W required in a car cabin application.
All the designs shall comply with the following guidelines:

- Where possible use a bridged earphone circuitry, to achieve the maximum power output from the device.
- Keep the earphone traces on the PCB and wires as short as possible.
- If your application requires a single ended earpiece and you want a direct connection, then leave one of the two output lines open and use only the other referred to ground. Remember that in this case the power output is 4 times lower than the bridged circuit and may not be enough to ensure a good voice volume.
- Make sure that the earphone traces in the PCB don't cross or run parallel to noisy traces (especially the power line)
- The cable to the speaker shall be a twisted pair with both the lines floating for the bridged output type, shielded with the shield to ground for the single ended output type.

10.3.1 Noise Filtering

The I/O of the PCB should have a noise filter close to the connector, to filter the high frequency GSM noise. The filter can be a Π formed by 2 capacitor and a inductance, with the one capacitor of *39pF - 0603* case , and the other capacitor of *1nF - 0603*; the inductance shall have a value of *39µH*.

Reproduction forbidden without Telit Communications S.p.A. written authorization - All Rights Reserved

10.4 Handset Earphone Design

As seen previously, a 16Ω earpiece can be directly connected to the output pads EAR_MT+ and EAR_MT- of the *GE864-QUAD / PY*.
This solution is often the more cost effective, reducing the components count to a minimum. There are several limitations to the use of this solution: speaker direct connect imposes the speaker characteristics to be almost exactly the suggested ones, otherwise the power output may be reduced (if speaker impedance is bigger than 16Ω) or the *GE864-QUAD / PY* ear port may be damaged (if speaker impedance is less than 15Ω).
The other limitation of the speaker direct connection is the power output capability of the *GE864-QUAD / PY* which is limited and for some particular applications may not be enough.
For these reasons, when the power output of the *GE864-QUAD / PY* is not enough or if the speaker characteristics are different from the suggested, then it is preferable to use an amplifier to increase the power and current output capabilities.
Again the output from the *GE864-QUAD / PY* is bridged and both lines should be used, where possible, as inputs to the power amplifier. This ensures a higher common mode rejection ratio, reducing the GSM current busts noise on the speaker output.
In this case the "***EAR_MT***" lines from the *GE864-QUAD / PY* should be AC coupled with a ceramic capacitor of 100nF (or bigger).
It is always desirable to have a mute control on the amplifier, in order to turn it off while the device is not sending signal to the output, in this manner the amplifier background noise which may be audible during idle conditions is cut off.
A principle schematic may be:

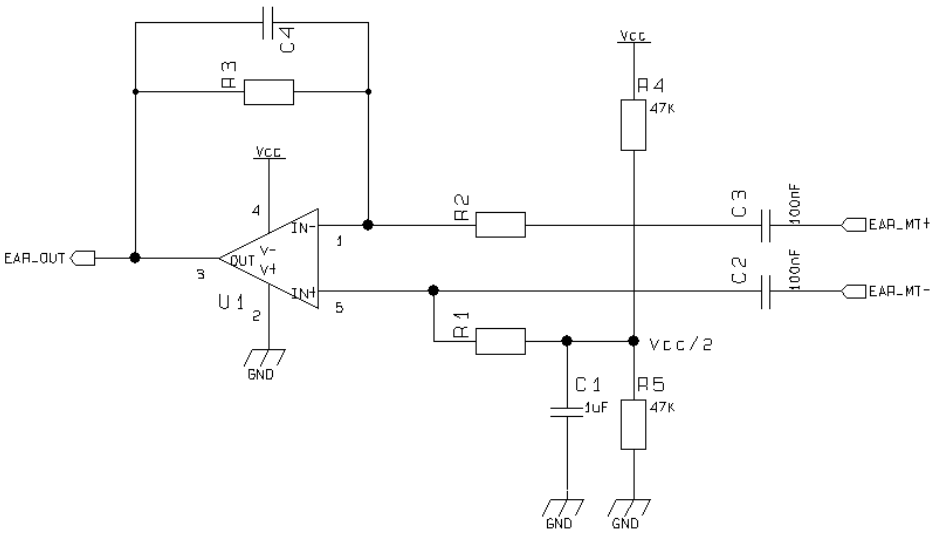

Reproduction forbidden without Telit Communications S.p.A. written authorization - All Rights Reserved

The resulting gain and high pass cut can be obtained with the formula:

$$Gain = \frac{R3}{R2}$$

$$freq. = \frac{1}{2\pi * R3 * C4} \text{ [Hz]}$$

And an example of internal Ear amplifier could be :

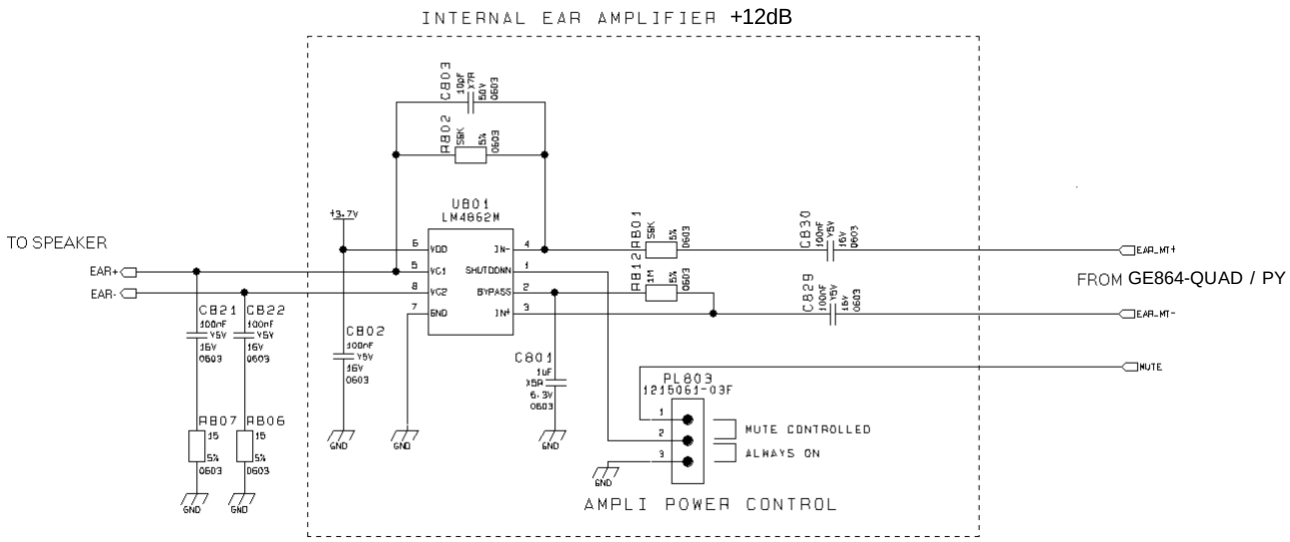

Some amplifier require a low impedance load at high frequency in order to avoid auto oscillation, this can be made with a capacitor (*100nF*) in series with a resistor (*15Ω*).

When designing your application, remember to provide an adequate bypass capacitor to the amplifier and place it close to the power input pin of the IC, keeping the traces as short as possible.

10.5Hands-Free Earphone (Low Power) Design

The same design considerations made for the handset are valid for the hands-free earphone.

Reproduction forbidden without Telit Communications S.p.A. written authorization - All Rights Reserved

10.6 Car Kit Speakerphone Design

For the car kit speaker phone function the power output requirement is usually at least 4W, therefore an amplifier is needed to boost the *GE864-QUAD / PY* output.
The design of the amplifier shall comply with the following guidelines:

- The input to the amplifier MUST be taken from the "***Ear_HF***" audio path of the *GE864-QUAD / PY*, because of its echo canceller parameters suited to a car cabin use.
- The amplifier shall have a gain of 30-40 times (29-32 dB) to provide the desired output power of 5-10W with the signal from the *GE864-QUAD / PY* "***Ear_HF***" audio output lines.
- If the amplifier has a fixed gain then it can be adjusted to the desired value by reducing the input signal with a resistor divider network.
- The amplifier shall have a mute control to be used while not in conversation. This results in two benefits: eliminating the background noise when not in conversation and saving power.
- The power to the amplifier should be decoupled as much as possible from the *GE864-QUAD / PY* power supply, by either keeping separate wires and placing bypass capacitors of adequate value close to the amplifier power input pads.
- The biasing voltage of the amplifier shall be stabilized with a low ESR (e.g. a tantalum) capacitor of adequate value.

NOTE: The GE864-QUAD / PY audio path connected to the car kit hands-free amplifier MUST be "Ear_HF" one, otherwise the echo cancellation will not be done due to the difference in the echo canceller characteristics of the GE864-QUAD / PY internal audio path from the external audio path.

Example of car kit amplifier schematic.

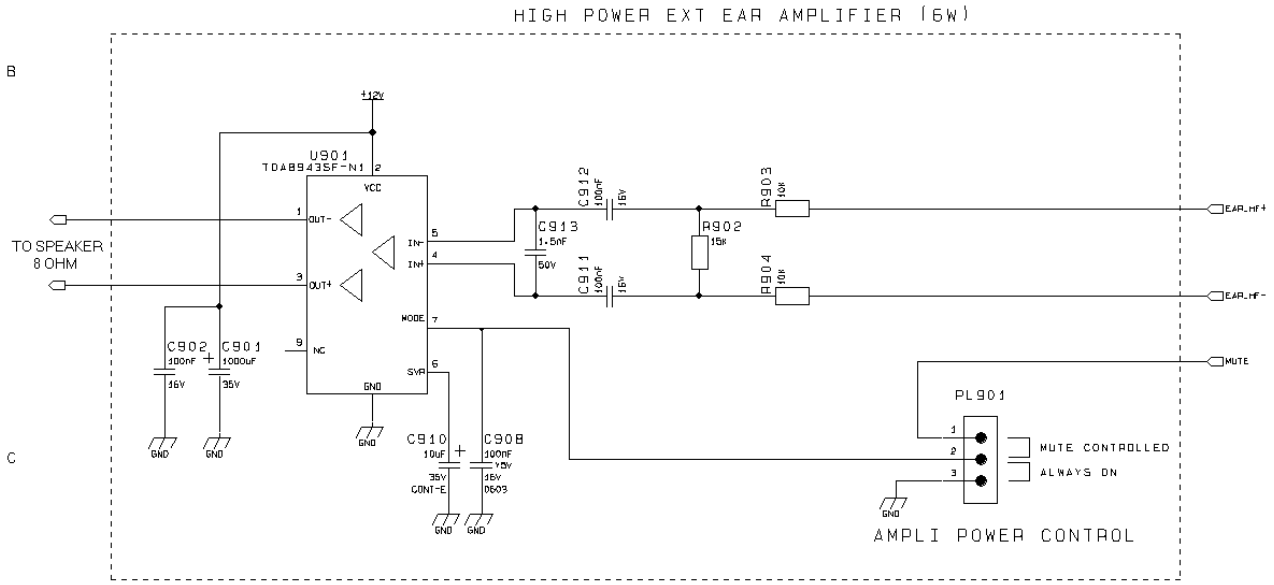

10.7 The Evaluation Kit for Telit Modules EVK2

10.7.1 Short Description

Telit supplies the Evaluation Kit for Telit modules EVK2 *to* assist the designer to develop his own applications based on GE864-QUAD / PY Telit module.

The *EVK2* is formed by a mother board *and* a *dedicated Telit module Interface Board with* RF antenna connectors.
It provides a fully functional solution for a complete data/phone application.
The motherboard has multiple power supply possibilities and is equipped with SIM card housing, RS 232 serial port level translator, direct USB1.1 connection, and two audio input/output paths.

The only items you have to provide are:

1) a personal computer or microcontroller ;
2) a SIM card with a valid Network subscription;
3) the audio accessories;
4) a knowledge of AT commands programming ;
5) a power supply

The connection between the *EVK2* and your PC (or other DTE) are realized by standard *RS232* or *USB 1.1* ports.

The communications between your application and Telit Modules are realized connecting the Asynchronous Serial Interfaces of the module's Base Band Chips (*ASC0* and *ASC1*) through:

→ *a double stacked standard DB9 connector,* that provides 2 serial communication paths *RS232 protocol* up to 115Kbit/sec .
→ a CMOS *HUB,* that makes both serial interfaces accessible through one physical connection providing two-way communication in compliance with *USB version 1.1 specification* .
The second one is the only possibility with portable personal computers, that generally have not the RS232 port .

Furthermore, the EVK2 allows to benefit of the special features of the new Telit Module versions with *PYTHON Script Interpreter*.

Reproduction forbidden without Telit Communications S.p.A. written authorization - All Rights Reserved

The ASC1 port is used for:

- Continuous of debug messages of the PYTHON Script Interpreter (requires PYTHON version modules;

10.7.2 EVK2 Audio Lines Characteristics

Low Power Audio1 Outputs *(Ear_MT+" line)*

- line coupling: AC
- line type: single ended referred to GND
- load impedance: ≥ 16 Ω
- signal bandwidth: 150 - 4000 Hz @ -3 dB
- max.output 655mV$_{rms}$ (open circuit)
- max. differential output voltage 164mV$_{rms}$ (typ) /16 Ω @ *-12dBFS*

Low Power Audio2 Outputs *(Ear_HF+" line)*

- line coupling: AC
- line type: single ended referred to GND
- load impedance: ≥ 16 Ω
- signal bandwidth: 150 - 4000 Hz @ -3 dB
- max. single ended output voltage 655mV$_{rms}$ (open circuit)

High Power Audio1 / Audio2 Outputs

- line coupling: DC
- line type: balanced
- load impedance: ≥ 8 Ω
- signal bandwidth: 150 - 4000 Hz @ -3 dB
- maximum power output: 500 mW @ 8 Ω
- THD+N 1% @ 350mW

Reproduction forbidden without Telit Communications S.p.A. written authorization - All Rights Reserved

11 General Purpose I/O

The general purpose I/O pads can be configured to act in three different ways:

- input
- output
- alternate function (internally controlled)

Input pads can only be read and report the digital value (high or low) present on the pad at the read time; output pads can only be written or queried and set the value of the pad output; an alternate function pad is internally controlled by the GE864-QUAD / PY firmware and acts depending on the function implemented. For Logic levels please refer to chapter 7.

The following GPIO are available on the GE864-QUAD and GE864-PY:

Ball	Signal	I/O	Function	Type	Input / output current	Default State	ON_OFF state	State during Reset	Note
C1	TGPIO_01	I/O	GPIO01 Configurable GPIO	CMOS 2.8V	1uA / 1mA	INPUT	LOW		
E6	TGPIO_02	I/O	GPIO02 Configurable GPIO	CMOS 2.8V	1uA / 1mA	INPUT	LOW		Alternate function (JDR)
C2	TGPIO_03	I/O	GPIO03 Configurable GPIO	CMOS 2.8V	1uA / 1mA	INPUT	LOW		
B3	TGPIO_04	I/O	GPIO04 Configurable GPIO	CMOS 2.8V	1uA / 1mA	INPUT	LOW		Alternate function (RF Transmission Control)
K8	TGPIO_05	I/O	GPIO05 Configurable GPIO	CMOS 2.8V	1uA / 1mA	INPUT	LOW		Alternate function (RFTXMON)
B5	TGPIO_06	I/O	GPIO06 Configurable GPIO	CMOS 2.8V	1uA / 1mA	INPUT	Pict 01	HIGH	Alternate function (ALARM)
L9	TGPIO_07	I/O	GPIO07 Configurable GPIO	CMOS 2.8V	1uA / 1mA	INPUT	LOW		Alternate function (BUZZER)
K11	TGPIO_08	I/O	GPIO08 Configurable GPIO	CMOS 2.8V	1uA / 1mA	INPUT	LOW		
C9	TGPIO_09	I/O	GPIO09 Configurable GPIO	CMOS 2.8V	1uA / 1mA	INPUT	LOW		
H3	TGPIO_10	I/O	GPIO10 Configurable GPIO	CMOS 2.8V	1uA / 1mA	INPUT	LOW		
D1	TGPIO_11	I/O	GPIO11 Configurable GPIO	CMOS 2.8V	1uA / 1mA	INPUT	LOW		
G4	TGPIO_12	I/O	GPIO12 Configurable GPIO	CMOS 2.8V	1uA / 1mA	INPUT	LOW		
K10	TGPIO_13	I/O	GPIO13 Configurable GPIO	CMOS 2.8V	1uA / 1mA	INPUT	LOW		
B4	TGPIO_14	I/O	GPIO14 Configurable GPIO	CMOS 2.8V	1uA / 1mA	INPUT	LOW		
F5	TGPIO_15	I/O	GPIO15 Configurable GPIO	CMOS 2.8V	1uA / 1mA	INPUT	LOW		
H6	TGPIO_16	I/O	GPIO16 Configurable GPIO	CMOS 2.8V	1uA / 1mA	INPUT	LOW		
H5	TGPIO_17	I/O	GPIO17 Configurable GPIO	CMOS 2.8V	1uA / 1mA	INPUT	LOW		
K7	TGPIO_18	I/O	GPIO18 Configurable GPIO	CMOS 2.8V	1uA / 1mA	INPUT	LOW		
B1	TGPIO_19	I/O	GPIO19 Configurable GPIO	CMOS 2.8V	1uA / 1mA	INPUT	LOW		
C3	TGPIO_20	I/O	GPIO20 Configurable GPIO	CMOS 2.8V	1uA / 1mA	INPUT	LOW		
L10	TGPIO_21	I/O	GPIO21 Configurable GPIO	CMOS 2.8V	1uA / 1mA	INPUT	HIGH		
E8	TGPIO_22	I/O	GPIO22 Configurable GPIO	**CMOS 1.8V (not 2.8V !!)**	1uA / 1mA	INPUT	LOW		

Reproduction forbidden without Telit Communications S.p.A. written authorization - All Rights Reserved

Not all GPIO pads support all these three modes:

- GPIO2 supports all three modes and can be input, output, Jamming Detect Output (Alternate function)
- GPIO4 supports all three modes and can be input, output, RF Transmission Control (Alternate function)
- GPIO5 supports all three modes and can be input, output, RFTX monitor output (Alternate function)
- GPIO6 supports all three modes and can be input, output, alarm output (Alternate function)
- GPIO7 supports all three modes and can be input, output, buzzer output (Alternate function)

pict01

ch1: ON_OFF (2sec)
ch2: GPIO 06 [bis]

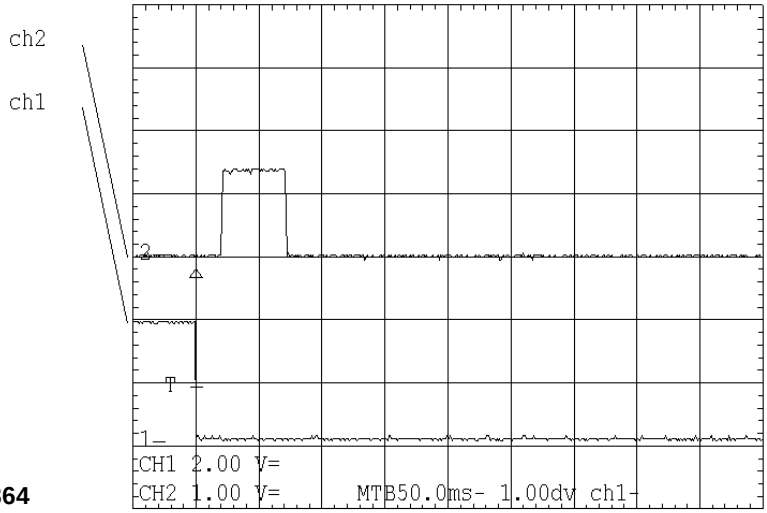

GE864

Reproduction forbidden without Telit Communications S.p.A. written authorization - All Rights Reserved

11.1 GPIO Logic levels

Where not specifically stated, all the interface circuits work at 2.8V CMOS logic levels.
The following table shows the logic level specifications used in the **GE864-QUAD/PY** interface circuits:

Absolute Maximum Ratings -Not Functional

Parameter	Min	Max
Input level on any digital pin when on	-0.3V	+3.6V
Input voltage on analog pins when on	-0.3V	+3.0 V

Operating Range - Interface levels (2.8V CMOS)

Level	Min	Max
Input high level	2.1V	3.3V
Input low level	0V	0.5V
Output high level	2.2V	3.0V
Output low level	0V	0.35V

For 2,0V signals:

Operating Range - Interface levels (2.0V CMOS)

Level	Min	Max
Input high level	1.6V	3.3V
Input low level	0V	0.4V
Output high level	1,65V	2.2V
Output low level	0V	0.35V

Reproduction forbidden without Telit Communications S.p.A. written authorization - All Rights Reserved

11.2 Using a GPIO Pad as INPUT

The GPIO pads, when used as inputs, can be connected to a digital output of another device and report its status, provided this device has interface levels compatible with the 2.8V CMOS levels of the GPIO.
If the digital output of the device to be connected with the GPIO input pad has interface levels different from the 2.8V CMOS, then it can be buffered with an open collector transistor with a 47K pull up to 2.8V.

11.3 Using a GPIO Pad as OUTPUT

The GPIO pads, when used as outputs, can drive 2.8V CMOS digital devices or compatible hardware. When set as outputs, the pads have a push-pull output and therefore the pull-up resistor may be omitted.

11.4 Using the RF Transmission Control GPIO4

The GPIO4 pin, when configured as RF Transmission Control Input, permits to disable the Transmitter when the GPIO is set to Low by the application.
In the design is necessary to add a pull up resistor (47K to PWRMON);

11.5 Using the RFTXMON Output GPIO5

The GPIO5 pin, when configured as RFTXMON Output, is controlled by the GE864-QUAD / PY module and will rise when the transmitter is active and fall after the transmitter activity is completed. For example, if a call is started, the line will be HIGH during all the conversation and it will be again LOW after hanged up.

The line rises up 300ms before first TX burst and will became again LOW from 500ms to 1sec after last TX burst.

Reproduction forbidden without Telit Communications S.p.A. written authorization - All Rights Reserved

11.6 Using the Alarm Output GPIO6

The GPIO6 pad, when configured as Alarm Output, is controlled by the GE864-QUAD / PY module and will rise when the alarm starts and fall after the issue of a dedicated AT command.
This output can be used to power up the GE864-QUAD / PY controlling microcontroller or application at the alarm time, giving you the possibility to program a timely system wake-up to achieve some periodic actions and completely turn off either the application and the GE864-QUAD / PY during sleep periods, dramatically reducing the sleep consumption to few µA.
In battery-powered devices this feature will greatly improve the autonomy of the device.

NOTE: During RESET the line is set to HIGH logic level.

11.7 Using the Buzzer Output GPIO7

The GPIO7 pad, when configured as Buzzer Output, is controlled by the GE864-QUAD / PY module and will drive with appropriate square waves a Buzzer driver.
This permits to your application to easily implement Buzzer feature with ringing tones or melody played at the call incoming, tone playing on SMS incoming or simply playing a tone or melody when needed by your application.
A sample interface scheme is included below to give you an idea of how to interface a Buzzer to the GPIO7:

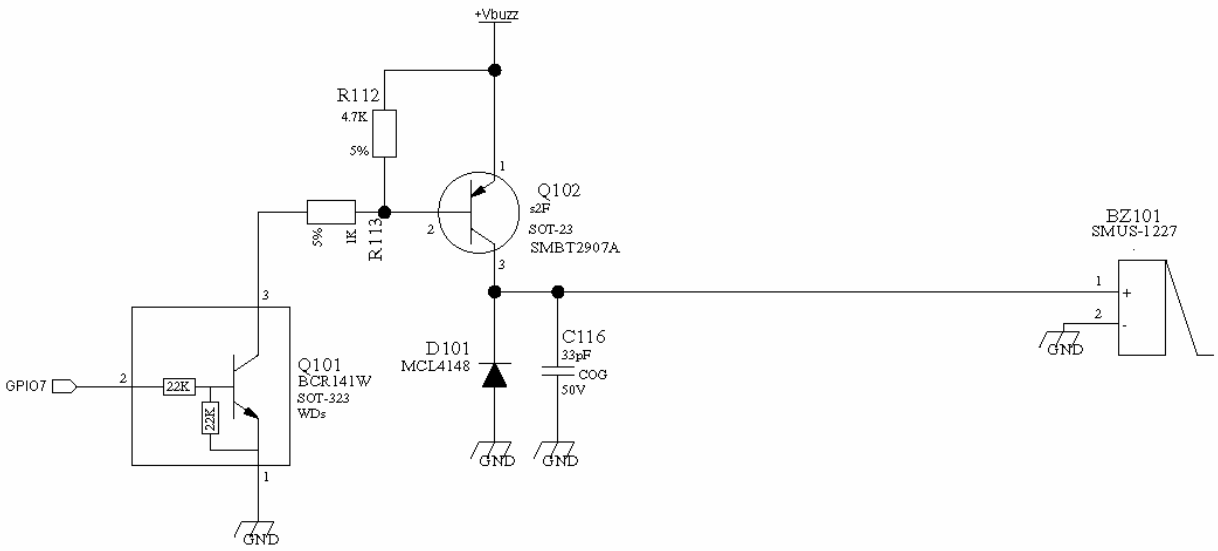

NOTE: To correctly drive a buzzer a driver must be provided, its characteristics depend on the Buzzer and for them refer to your buzzer vendor.

Reproduction forbidden without Telit Communications S.p.A. written authorization - All Rights Reserved

11.8 Indication of network service availability

The STAT_LED pin status shows information on the network service availability and Call status.
In the GE864 modules, the STAT_LED usually needs an external transistor to drive an external LED.
Therefore, the status indicated in the following table is reversed with respect to the pin status.

LED status	Device Status
Permanently off	Device off
Fast blinking (Period 1s, Ton 0,5s)	Net search / Not registered / turning off
Slow blinking (Period 3s, Ton 0,3s)	Registered full service
Permanently on	a call is active

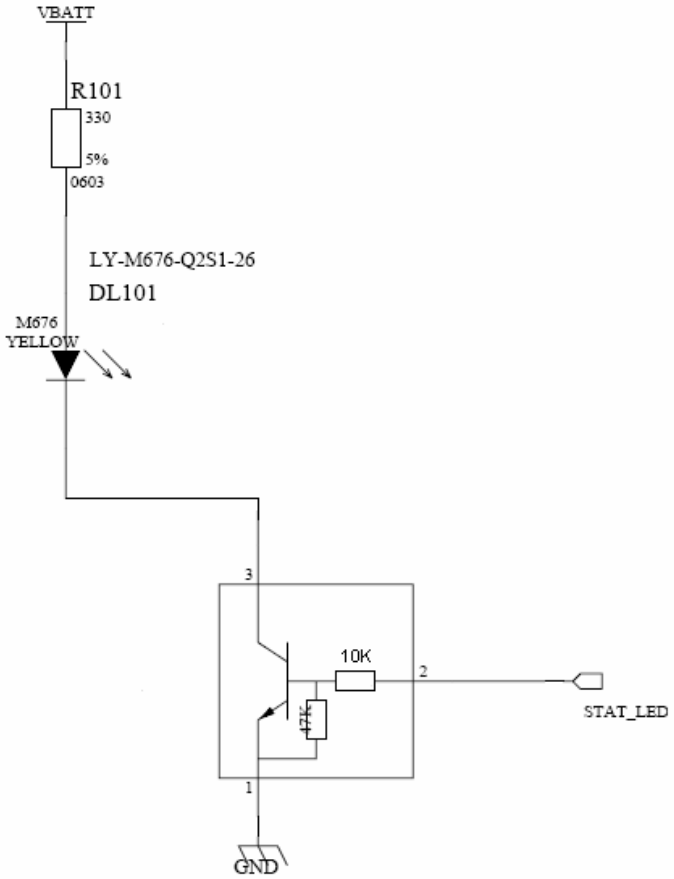

11.9 RTC Bypass out

The VRTC pin brings out the Real Time Clock supply, which is separate from the rest of the digital part, allowing having only RTC going on when all the other parts of the device are off.
To this power output a backup capacitor can be added in order to increase the RTC autonomy during power off of the battery. NO Devices must be powered from this pin.

11.10 VAUX1 power output

A regulated power supply output is provided in order to supply small devices from the module.
This output is active when the module is ON and goes OFF when the module is shut down.
The operating range characteristics of the supply are:

Operating Range – VAUX1 power supply

	Min	Typical	Max
Output voltage	2.75V	2.85V	2.95V
Output current			100mA
Output bypass capacitor			2.2µF

Reproduction forbidden without Telit Communications S.p.A. written authorization - All Rights Reserved

12 DAC and ADC section

12.1 DAC Converter

12.1.1 Description

The GE864-QUAD / PY module provides a Digital to Analog Converter. The signal (named DAC_OUT) is available on BGA Ball C7 of the GE864-QUAD / PY module and on pin 17 of PL102 on EVK2 Board (CS1152).
The on board DAC is a 10 bit converter, able to generate a analogue value based a specific input in the range from 0 up to 1023. However, an external low-pass filter is necessary

	Min	Max	Units
Voltage range (filtered)	0	2,6	Volt
Range	0	1023	Steps

The precision is 10 bits so, if we consider that the maximum voltage is 2V, the integrated voltage could be calculated with the following formula:

Integrated output voltage = 2 * value / 1023

DAC_OUT line must be integrated (for example with a low band pass filter) in order to obtain an analog voltage.

Reproduction forbidden without Telit Communications S.p.A. written authorization - All Rights Reserved

12.1.2 Enabling DAC

An AT command is available to use the DAC function.
The command is **AT#DAC[=<enable>[,<value>]]**

<value> - scale factor of the integrated output voltage (0..1023 - 10 bit precision)
it must be present if **<enable>=1**

Refer to SW User Guide or AT Commands Reference Guide for the full description of this function.

NOTE: **The DAC frequency is selected internally. D/A converter must not be used during POWERSAVING.**

12.1.3 Low Pass Filter Example

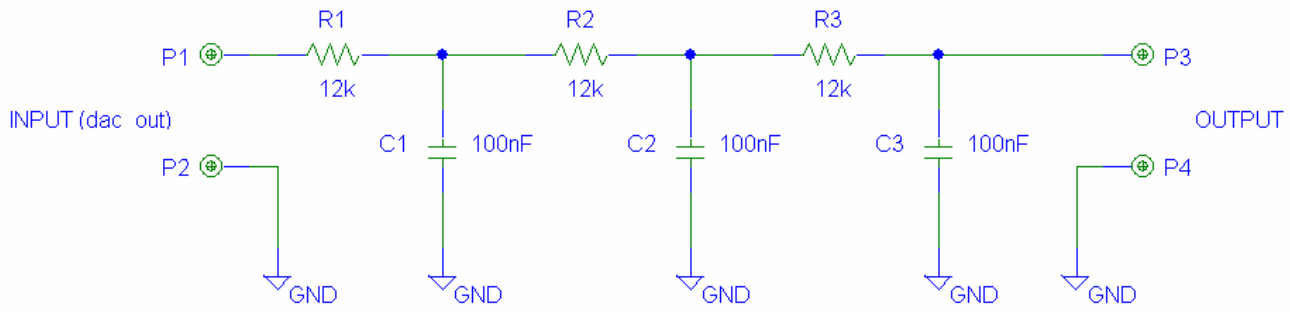

Reproduction forbidden without Telit Communications S.p.A. written authorization - All Rights Reserved

12.2 ADC Converter

12.2.1 Description

The on board A/D are 11-bit converter. They are able to read a voltage level in the range of 0÷2 volts applied on the ADC pin input, store and convert it into 11 bit word.

	Min	Max	Units
Input Voltage range	0	2	Volt
AD conversion	-	11	bits
Resolution	-	< 1	mV

The GE864-QUAD / PY module provides 3 Analog to Digital Converters. The input lines are:

ADC_IN1 available on Ball J11 and Pin 19 of PL102 on EVK2 Board (CS1152).
ADC_IN2 available on Ball H11 and Pin 20 of PL102 on EVK2 Board (CS1152).
ADC_IN3 available on Ball G11 and Pin 21 of PL102 on EVK2 Board (CS1152).

12.2.2 Using ADC Converter

An AT command is available to use the ADC function.

The command is **AT#ADC=1,2**

The read value is expressed in mV

Refer to SW User Guide or AT Commands Reference Guide for the full description of this function.

Reproduction forbidden without Telit Communications S.p.A. written authorization - All Rights Reserved

12.3 Mounting the GE864 on your Board

12.3.1 General

The **Telit GE864 modules** have been designed in order to be compliant with a standard lead-free SMT process.

12.3.2 Module finishing & dimensions

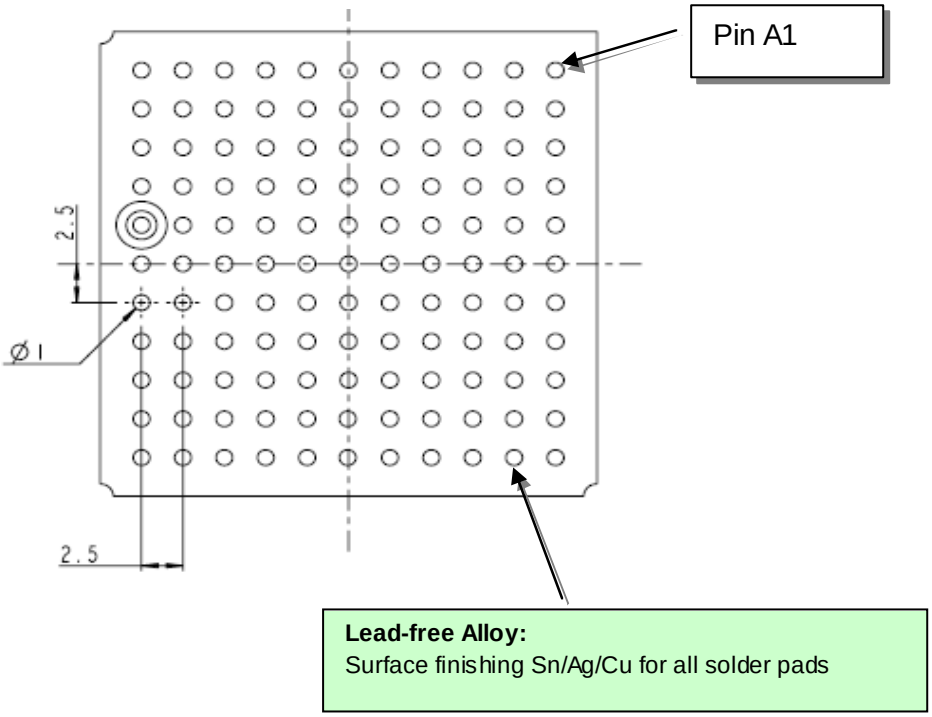

Reproduction forbidden without Telit Communications S.p.A. written authorization - All Rights Reserved

12.3.3 Recommended foot print for the application (GE864)

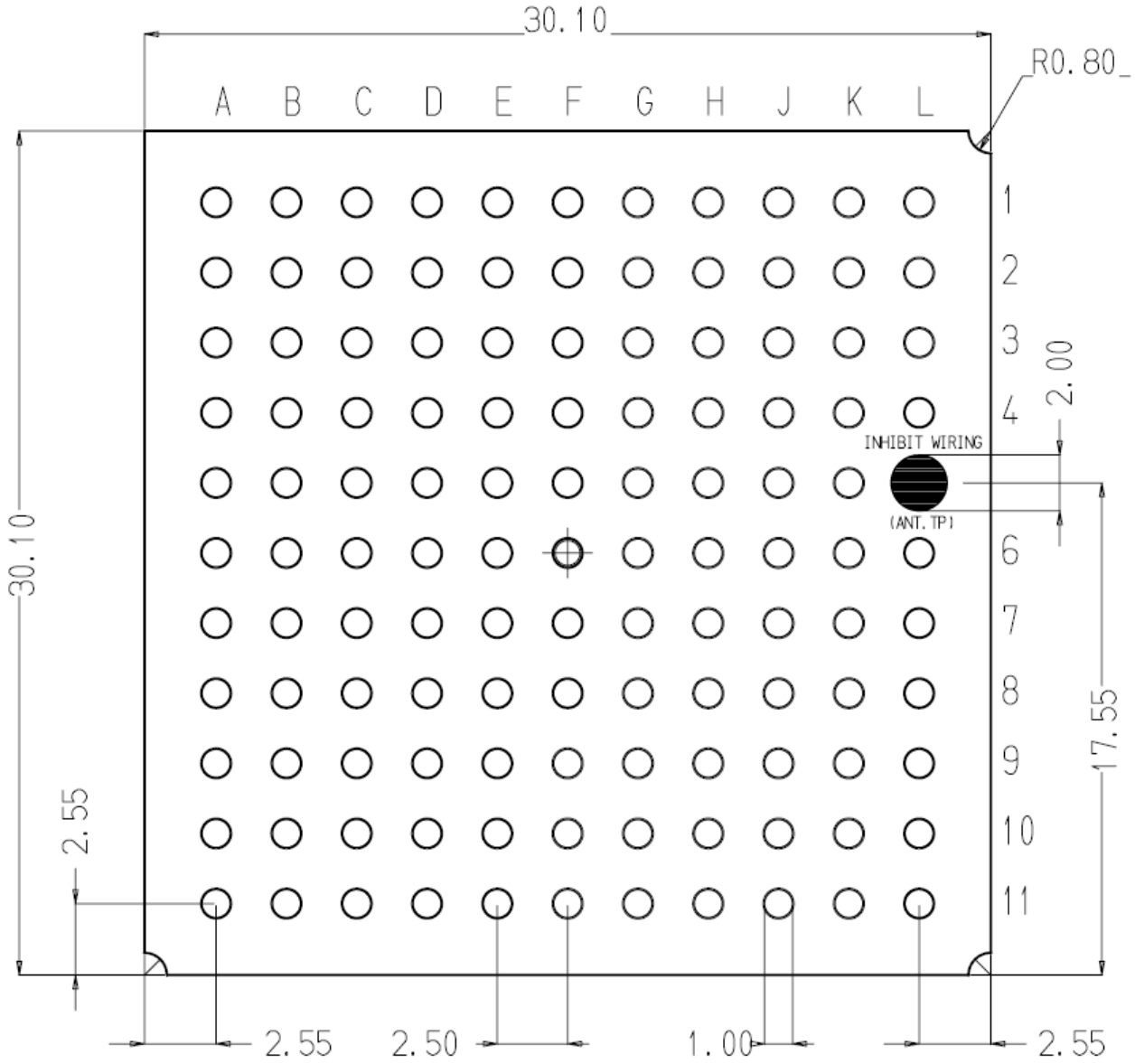

Top View

Reproduction forbidden without Telit Communications S.p.A. written authorization - All Rights Reserved

12.3.4 Debug of the GE864 in production

To test and debug the mounting of the GE864, we strongly recommend to foreseen test pads on the host PCB, in order to check the connection between the GE864 itself and the application and to test the performance of the module connecting it with an external computer. Depending by the customer application, these pads include, but are not limited to the following signals:

- TXD
- RXD
- ON/OFF
- RESET
- GND
- VBATT
- TX_TRACE
- RX_TRACE
- PWRMON

12.3.5 Stencil

Stencil's apertures layout can be the same of the recommended footprint (1:1), we suggest a thickness of stencil foil ≥ 120µm.

Reproduction forbidden without Telit Communications S.p.A. written authorization - All Rights Reserved

12.3.6 PCB pad design

Non solder mask defined" (NSMD) type is recommended for the solder pads on the PCB.

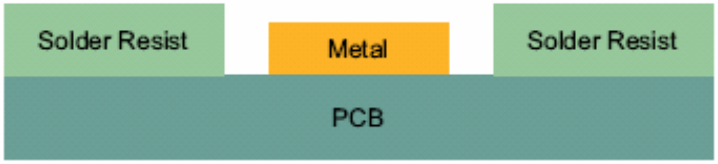

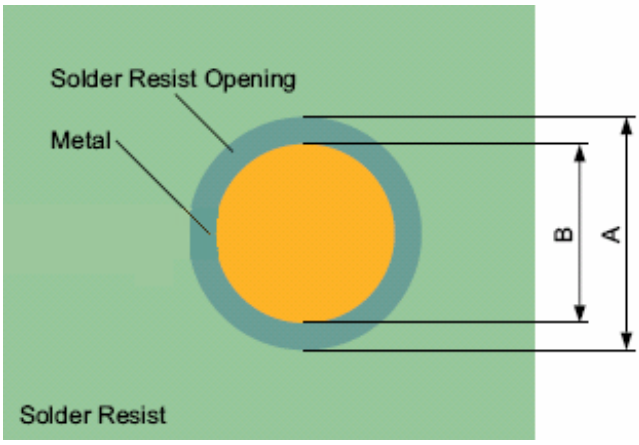

Recommendations for PCB pad dimensions

Ball pitch [mm]	2,5
Solder resist opening diameter A [mm]	1,150
Metal pad diameter B [mm]	1 ± 0.05

Placement of microvias not covered by solder resist is not recommended inside the "Solder resist opening", unless the microvia carry the same signal of the pad itself.

Reproduction forbidden without Telit Communications S.p.A. written authorization - All Rights Reserved

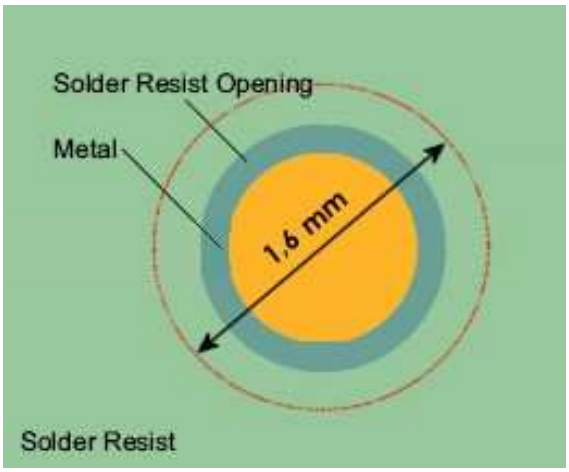

Holes in pad are allowed only for blind holes and not for through holes.

Recommendations for PCB pad surfaces:

Finish	Layer thickness [µm]	Properties
Electro-less Ni / Immersion Au	3 –7 / 0.05 – 0.15	good solder ability protection, high shear force values

The PCB must be able to resist the higher temperatures which are occurring at the lead-free process. This issue should be discussed with the PCB-supplier. Generally, the wettability of tin-lead solder paste on the described surface plating is better compared to lead-free solder paste.

12.3.7 Solder paste

	Lead free
Solder paste	Sn/Ag/Cu

Reproduction forbidden without Telit Communications S.p.A. written authorization - All Rights Reserved

12.3.8 GE864 Solder reflow

The following is the recommended solder reflow profile

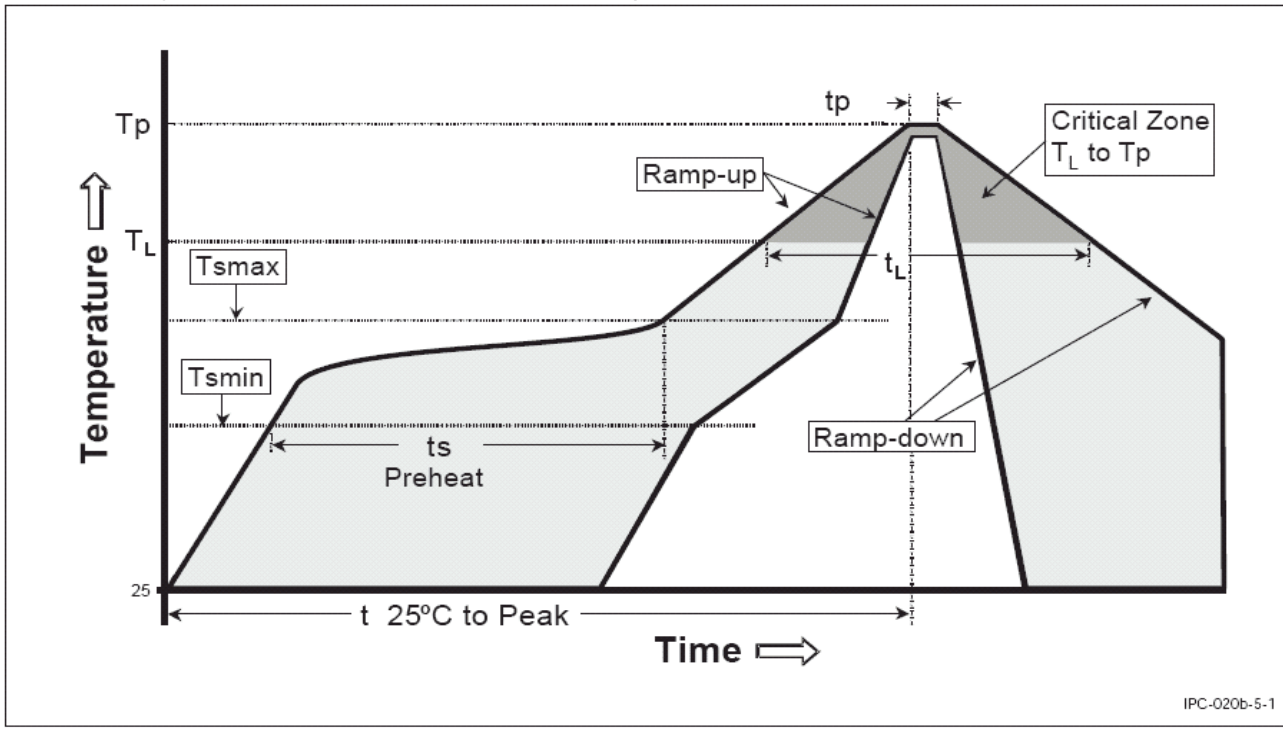

Profile Feature	Pb-Free Assembly
Average ramp-up rate (T_L to T_P)	3℃/second max
Preheat – Temperature Min (Tsmin) – Temperature Max (Tsmax) – Time (min to max) (ts)	 150℃ 200℃ 60-180 seconds
Tsmax to TL – Ramp-up Rate	 3℃/second max
Time maintained above: – Temperature (TL) – Time (tL)	 217℃ 60-150 seconds
Peak Temperature (Tp)	245 +0/-5℃
Time within 5℃ of actual Peak Temperature (tp)	10-30 seconds
Ramp-down Rate	6℃/second max.
Time 25℃ to Peak Temperature	8 minutes max.

NOTE: All temperatures refer to topside of the package, measured on the package body surface.

NOTE: GE864 module can accept only one reflow process

Reproduction forbidden without Telit Communications S.p.A. written authorization - All Rights Reserved

12.4 Packing system

The **Telit GE864 modules** are packaged on trays of 20 pieces each. This is especially suitable for the GE864 according to SMT processes for pick & place movement requirements.

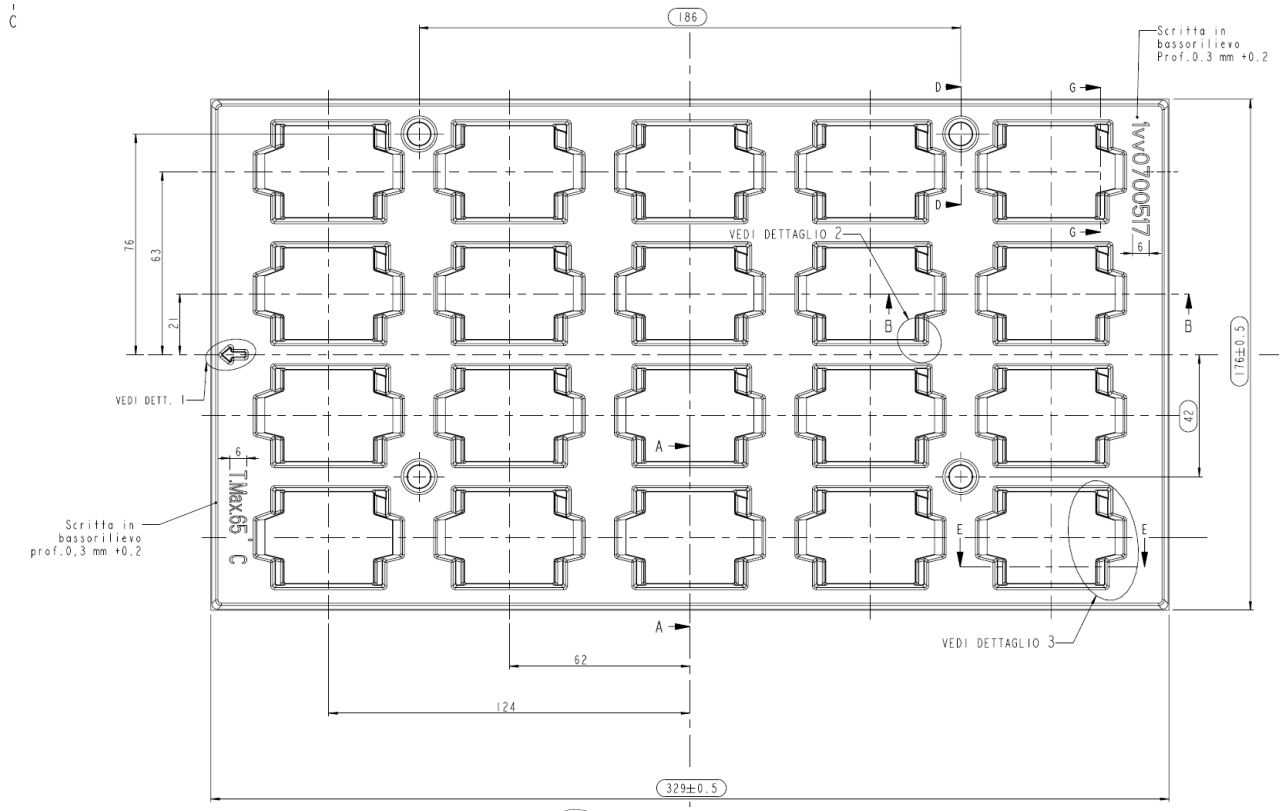

Section A-A

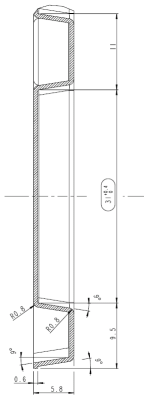

The size of the tray is: 329 x 176mm

NOTE: These trays can withstand at the maximum temperature of 65°C.

Reproduction forbidden without Telit Communications S.p.A. written authorization - All Rights Reserved

12.4.1 GE864 orientation on the tray

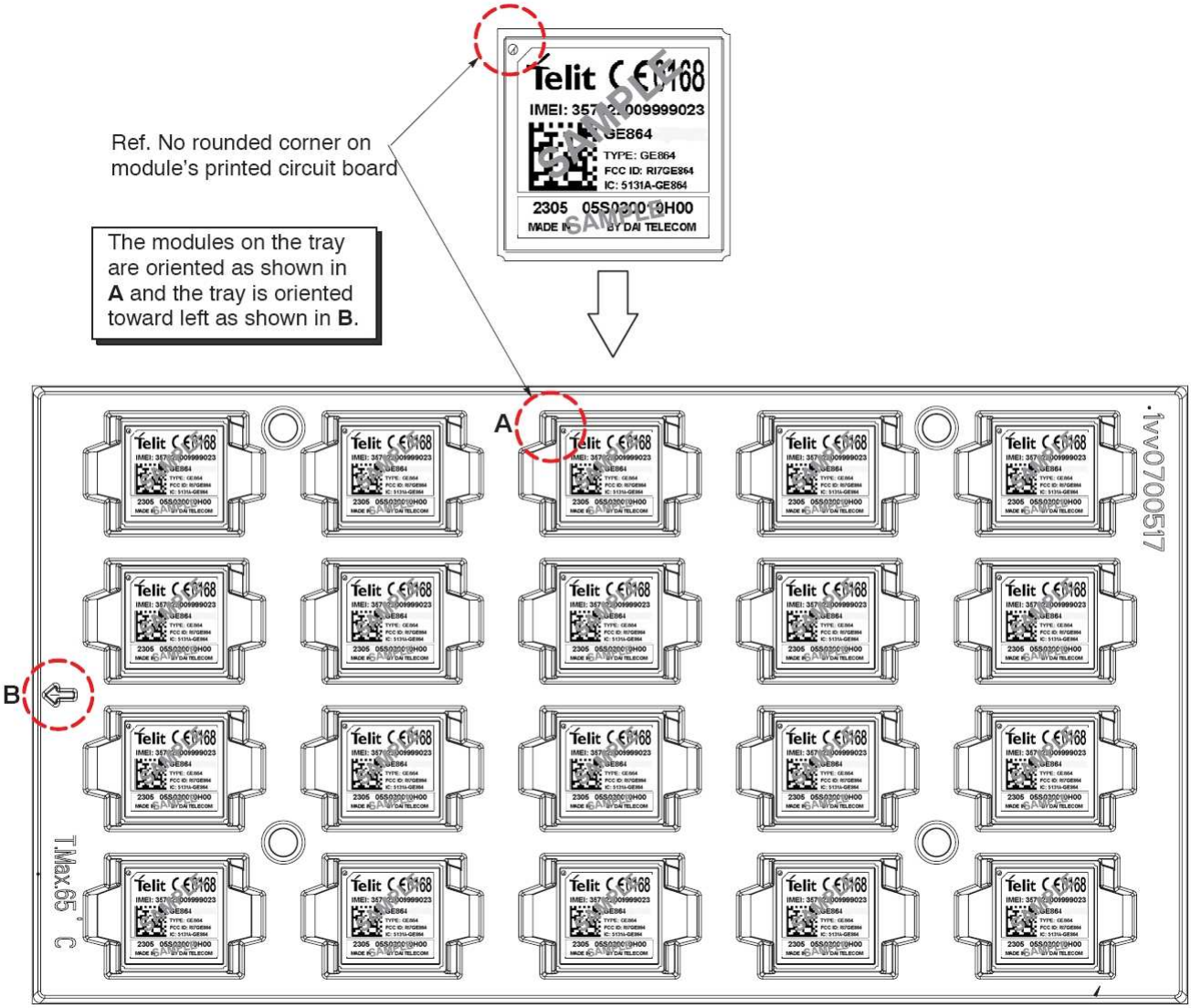

12.4.2 Moisture sensibility

The level of moisture sensibility of **GE864** module is “3”, in according with standard IPC/JEDEC J-STD-020, take care all the relatives requirements for using this kind of components.

Reproduction forbidden without Telit Communications S.p.A. written authorization - All Rights Reserved

13 Conformity Assessment Issues

The GE864-QUAD / PY module is assessed to be conform to the R&TTE Directive as stand-alone products, so If the module is installed in conformance with Dai Telecom installation instructions require no further evaluation under Article 3.2 of the R&TTE Directive and do not require further involvement of a R&TTE Directive Notified Body for the final product.

In all other cases, or if the manufacturer of the final product is in doubt then the equipment integrating the radio module must be assessed against Article 3.2 of the R&TTE Directive**.**
In all cases assessment of the final product must be made against the Essential requirements of the R&TTE Directive Articles 3.1(a) and (b), safety and EMC respectively, and any relevant Article 3.3 requirements.

The GE864-QUAD / PY module is conform with the following European Union Directives:

- R&TTE Directive 1999/5/EC (Radio Equipment & Telecommunications Terminal Equipments)
- Low Voltage Directive 73/23/EEC and product safety
- Directive 89/336/EEC for conformity for EMC

  In order to satisfy the essential requisite of the R&TTE 99/5/EC directive, the GE864-QUAD / PY module is compliant with the following standards:

- GSM (Radio Spectrum). Standard: EN 301 511 and 3GPP 51.010-1
- EMC (Electromagnetic Compatibility). Standards: EN 301 489-1 and EN 301 489-7
- LVD (Low Voltage Directive) Standards: EN 60 950

In this document and the Hardware User Guide, Software User Guide all the information you may need for developing a product meeting the R&TTE Directive is included.

The GE864-QUAD / PY module is conform with the following US Directives:

- Use of RF Spectrum. Standards: FCC 47 Part 24 (GSM 1900)
- EMC (Electromagnetic Compatibility). Standards: FCC47 Part 15

To meet the FCC's RF exposure rules and regulations:

- The system antenna(s) used for this transmitter must be installed to provide a separation distance of at least 20 cm from all the persons and must not be co-located or operating in conjunction with any other antenna or transmitter.
- The system antenna(s) used for this module must not exceed 3 dBi for mobile and fixed or mobile operating configurations.
- Users and installers must be provided with antenna installation instructions and transmitter operating conditions for satisfying RF exposure compliance.

Manufacturers of mobile, fixed or portable devices incorporating this module are advised to clarify any regulatory questions and to have their complete product tested and approved for FCC compliance.

Reproduction forbidden without Telit Communications S.p.A. written authorization - All Rights Reserved

14 SAFETY RECOMMANDATIONS

READ CAREFULLY

Be sure the use of this product is allowed in the country and in the environment required. The use of this product may be dangerous and has to be avoided in the following areas:

- Where it can interfere with other electronic devices in environments such as hospitals, airports, aircrafts, etc
- Where there is risk of explosion such as gasoline stations, oil refineries, etc

It is responsibility of the user to enforce the country regulation and the specific environment regulation.

Do not disassemble the product; any mark of tampering will compromise the warranty validity.

We recommend following the instructions of the hardware user guides for a correct wiring of the product. The product has to be supplied with a stabilized voltage source and the wiring has to be conforming to the security and fire prevention regulations.

The product has to be handled with care, avoiding any contact with the pins because electrostatic discharges may damage the product itself. Same cautions have to be taken for the SIM, checking carefully the instruction for its use. Do not insert or remove the SIM when the product is in power saving mode.

The system integrator is responsible of the functioning of the final product; therefore, care has to be taken to the external components of the module, as well as of any project or installation issue, because the risk of disturbing the GSM network or external devices or having impact on the security. Should there be any doubt, please refer to the technical documentation and the regulations in force.

Every module has to be equipped with a proper antenna with specific characteristics. The antenna has to be installed with care in order to avoid any interference with other electronic devices and has to guarantee a minimum distance from the body (20 cm). In case of this requirement cannot be satisfied, the system integrator has to assess the final product against the SAR regulation.

The European Community provides some Directives for the electronic equipments introduced on the market. All the relevant information's are available on the European Community website:

http://europa.eu.int/comm/enterprise/rtte/dir99-5.htm

The text of the Directive 99/05 regarding telecommunication equipments is available, while the applicable Directives (Low Voltage and EMC) are available at:

http://europa.eu.int/comm/enterprise/electr_equipment/index_en.htm

Reproduction forbidden without Telit Communications S.p.A. written authorization - All Rights Reserved

15 Document Change Log

Revision	Date	Changes
ISSUE#0	12/06/06	Release First ISSUE# 0
ISSUE #1	22/11/05	Added notice on page 4.
ISSUE #2	19/12/05	Added Paragr.10 Conformity Assessment Issues
ISSUE #3	07/02/06	Added products order codes table Added Disclaimer Added Safety Recommendations
ISSUE #4	07/09/06	Full Review of the manual Added ADC description Added DAC description Added Pinout and Process flow description Added Packaging
ISSUE #5	03/10/06	TGPIO23 now RESERVED ; modified low pass filter example for DAC, 6.1 antenna characteristics
ISSUE #6	23/10/06	Updated “GE864 orientation on the tray” layout.
ISSUE #7	08/02/07	Pinout updated, Camera removed, Added Stat Led and GPIO5 description, added VAUX1, schematics updated for On_off, reset, level adapter 5V, RS232 transceiver, Power supply. Modified Charger description.
ISSUE #8	07/06/07	Updated DISCLAIMER, Added note on charger (CFUN4 and ON_OFF), Added Power consumptions table, Added new table for GPIO status in Reset and Power on, added RFTXMON timing, Switching description modified in “+ 12V input Source Power Supply Design Guidelines”, Added Alternate Function for GPIO4, Added BGA balls mechanical drawing.
ISSUE #9	21/06/07	modified absolute maximum ratings ; added GPIO2 Alternate function description

Reproduction forbidden without Telit Communications S.p.A. written authorization - All Rights Reserved